VIESSMANN

Heating Systems

Industrial Systems

Refrigeration Systems

Price List 2026

USA

- Floor-Standing Boilers
- Wall-Mount Boilers
- Domestic Hot Water Tanks
- System Technology
- Solar Systems

1

Effective March 2nd, 2026

ViShop

Introducing a state-of-the-art ordering and quotation service for our wholesale partners!

A world of detailed information and user-friendly instruction tutorials awaits you, and it's available right now.

+ Place orders quickly, create multiple carts for different projects and get prices in a snap

+ Easy-to-use quote helper and handy boiler/parts lookup anytime you want

+ Accessible on any device, whether you need to order one piece or a full heating system

+ Exclusive to wholesalers for use with their entire team

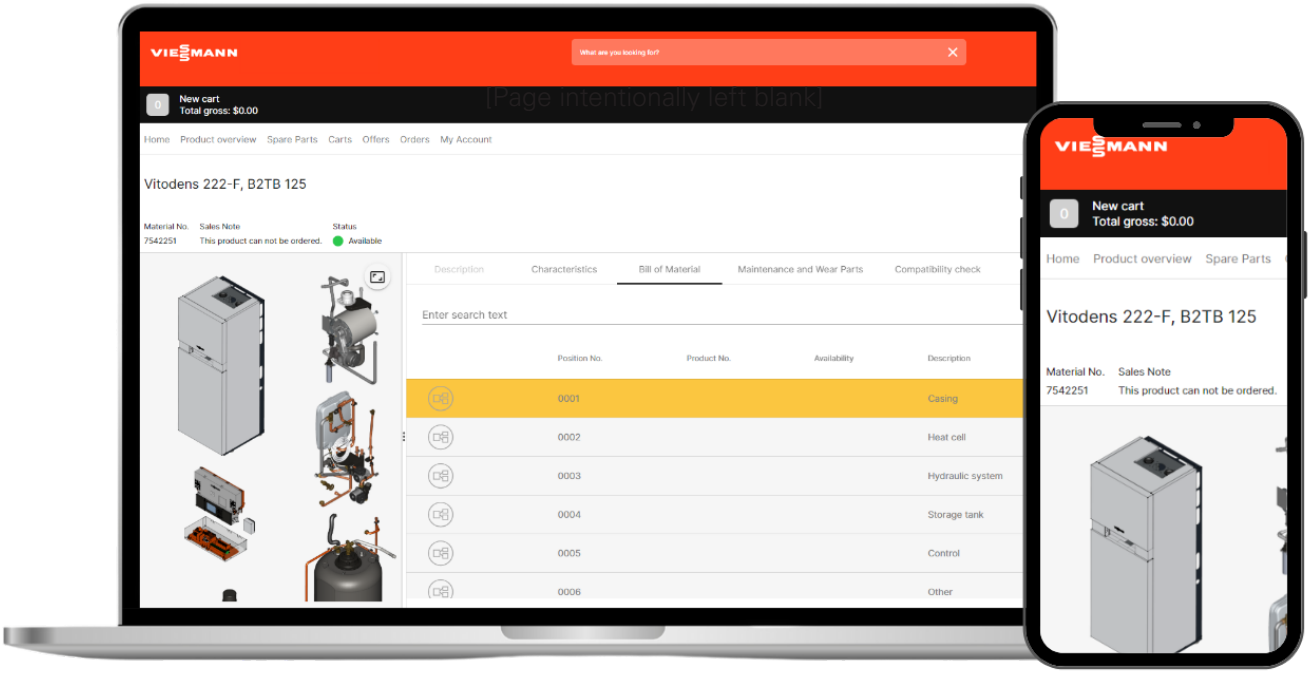

To schedule an in-depth demonstration contact Inside Sales at 401-732-0667

Contents

March 2nd, 2026

1.1 1.2 1.3 1.4	Vitodens 100-W Vitodens 200-W Vitodens 200-W Vitocrossal 300 CU3A	Wall-mount boilers B2HE single B2HA single Floor-standing boilers	8.5 to 199 MBH 8.5 to 199 MBH 71 to 530 MBH 19 to 199 MBH	**Gas-Fired Condensing Boilers** 12 to 530 MBH	1
2.1 2.2 2.3	Vitocell 100-V Vitocell 300-H Vitocell 300-V / 300-B		53 to 79 USG 53 to 119 USG 42 to 119 USG	**Indirect-Fired Domestic Hot Water Storage Tanks**	2
3.1 3.2	Vitosol 200-FM Vitosol Installation	Flat plate collectors		**Solar Collectors System Technology**	3
4.1 4.2	Wi-Fi Connectivity Versatronik				4
5.1	Vitorond 100	Sectional cast iron boilers	91 to 245 MBH	**Oil-Fired Heating Boilers** 91 to 245 MBH	5
6.1 6.2	Vitocrossal 200 CI2 Series Vitocrossal 200 CI2 Accessories		399 to 2000 MBH	**Gas-Fired Condensing Boilers**	6
7.1	Low-Loss Headers			**Communication Technology Hydronic Heating Accessories**	7

Contents

as of March 2nd, 2026

Appendix

1 **Terms and Conditions** of Sale, Delivery and Payment
2 **Venting Categories** for Gas-Fired Boilers
3 **Viessmann Warranties**
4 **Approval and Listing Overview**
5 **Vitorond 100 Ordering / Shipping Configuration Overview**

ViPARTS APP

Our ViParts App is an easy, quick & efficient method to find spare parts for contractors, technicians or engineers. With the help of the serial number Viessmann parts are now at your fingertips!

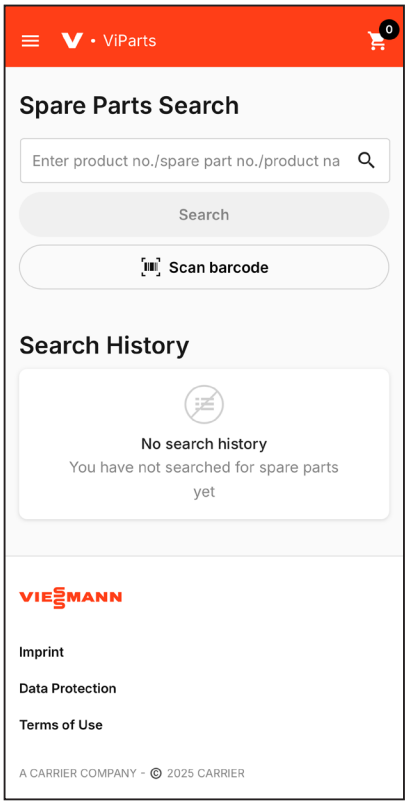

Looking to find out what spare parts you need to repair a boiler?
Simply enter the product serial number, product name or scan the barcode and receive instant results.

- Look up all the sub-assemblies for the products,select individual parts.
- View detailed product information like the item part number and in most cases an image of the part.
- Check the compatibility of your product and most recent part number and make your working life easier with the ViParts App.

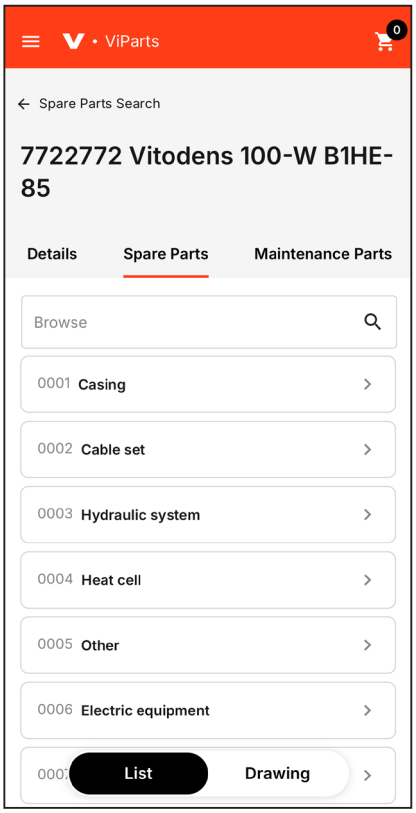

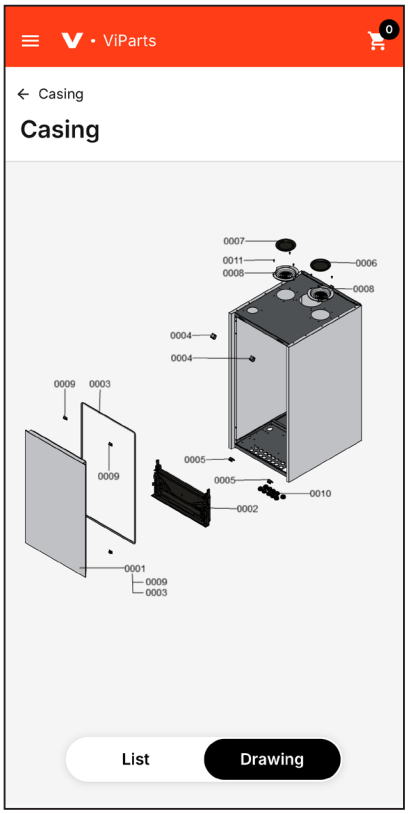

GET IT ON Google Play

Download on the App Store

Limited Lifetime Warranty
on stainless steel heat exchangers for gas condensing boilers up to 199 MBH

Wall mounted gas condensing boiler
8.5 to 199 MBH / 2.5 to 58.3 kW

Vitodens 100-W
B1HE Series
B1KE Series

Wall mounted gas condensing boiler
With modulating MatriX-Plus burner, for room air independent operation (using a direct vent system) or room air dependent operation.

For natural gas and LPG
Colour: Vitopearlwhite

- Gas-Fired Wall-Mounted Condensing Boiler with modulating stainless steel MatriX plus cylinder burner, stainless steel Inox-Radial heat exchanger for room air independent operation (using a direct vent system) or room air dependent operation.
- Lasting Performance with industry-leading Viessmann made stainless steel Inox-Radial heat exchanger constructed to CSA B51 and ASME Section IV.
- Fast Installation and Reduced Maintenance with Lambda ProPlus, industry-first intelligent combustion management system: Adjusts with the push of a button to gas type and quality. No fuel conversion kit required.
- Extremely Quiet Operation; quieter than most refrigerators. True High-Altitude Operation up to 10,000 ft. (3,000 m) with simple electronic adjustment. 95% A.F.U.E.
- Low start/stop frequency even with low heat dissipation due to pause time optimization and large modulation range of up to 1:10.
- 3.5 inch display with touch buttons and plain text, commissioning wizard, displays for energy consumption, and alternatively operation via mobile terminal device.
- Internet-capable thanks to integrated WLAN interface for operation and service via Viessmann apps.

<-Return to contents

VITODENS 100-W

Gas condensing system boiler
Room air independent operation (using a direct vent system) or room air dependent operation

Heating system	Control unit
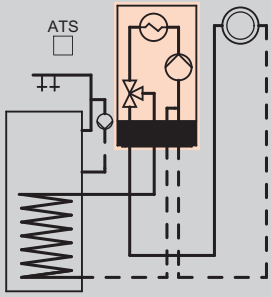 1 heating circuit without mixer	**For constant temperature or weather-compensated operation** With 4-section LED display and operation via touch buttons Internet and local service connection via integral WiFi interface A room temperature controller is required for room temperature-dependent operation. An outside temperature sensor is included for weather-compensated operation.

1.1

Notes:
The boilers are preset for natural gas. The conversion to LPG is made at the programming unit (a conversion kit is provided with the boiler).

Standard delivery/equipment level
- Modulating, fan-assisted premix burner with Lambda ProPlus
- Control unit with integral WiFi interface
- Integral safety valves
- High efficiency circulation pump and 3-way valve (for connecting an indirect DHW tank)
- Fully plumbed and wired
- Boiler flue connection

Standard pressure relief valve 30 psig
Optional 45 psig pressure relief valve 9549 944, ***66.***– USD
(BxxE 150-199 only) Optional 60 psig pressure relief valve 9560 183, ***66.***– USD

Gas condensing system boiler
For room air independent operation (using a direct vent system) or room air dependent operation.

System Fuel Input (NG)MBH kW (LPG)MBH kW	B1HE-85 8.5-85 2.5-24.9 14-85 4.1-24.9	B1HE-120 12-120 3.5-35.2 14-120 4.1-35.2	B1HE-150 15.5-150 4.5-44.0 22.7-150 6.7-44.0	B1HE-199 19.9-199 5.8-58.3 22.7-199 6.7-58.3	
	7722 772 **4,690.–**	7722 773 **4,840.–**	7722 774 **5,050.–**	7722 775 **5,150.–**	**Order No. USD**
Specification					
Length	19¾ (500)	19¾ (500)	21¾ (550)	21¾ (550)	in (mm)
Width	17¾ (450)	17¾ (450)	17¾ (450)	17¾ (450)	in (mm)
Height	33¾ (859)	33¾ (859)	39 (989)	39 (989)	in (mm)
Weight	108 (49)	108 (49)	179 (81)	179 (81)	lbs (kg)

<-Return to contents

VITODENS 100-W

Gas condensing combi boiler
Room air independent operation (using a direct vent system) or room air dependent operation

Heating system	Control unit
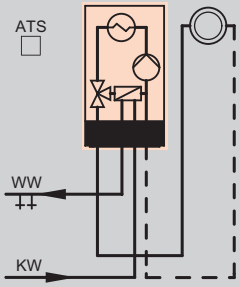 1 heating circuit without mixer	**For constant temperature or weather-compensated operation** With 4-section LED display and operation via touch buttons Internet and local service connection via integral WiFi interface A room temperature controller is required for room temperature-dependent operation. An outside temperature sensor is included for weather-compensated operation.

1.1

Notes:
The boilers are preset for natural gas. The conversion to LPG is made at the programming unit (a conversion kit is provided with the boiler).

Standard delivery/equipment level
- Modulating, fan-assisted premix burner with Lambda ProPlus
- Control unit with integral WiFi interface
- Integral safety valves
- High efficiency circulation pump and 3-way valve
- Fully plumbed and wired
- Boiler flue connection

Standard pressure relief valve 30 psig
Optional 45 psig pressure relief valve 9549 944, ***66.***– USD
(BxxE 150-199 only) Optional 60 psig pressure relief valve 9560 183, ***66.***– USD

Gas condensing combi boiler
Room air independent operation (using a direct vent system) or room air dependent operation

System Fuel	Input (NG)MBH kW (LPG)MBH kW	B1KE-120 12-120 3.5-35.2 14-120 4.1-35.2	B1KE-199 19.9-199 5.8-58.3 22.7-199 6.7-58.3	
		7722 776 **5,130.–**	7722 777 **5,390.–**	**Order No.** **USD**
Specification				
Length		19¾ (500)	21¾ (550)	in (mm)
Width		17¾ (450)	17¾ (450)	in (mm)
Height		33¾ (859)	39 (989)	in (mm)
Weight		110 (50)	190 (86)	lbs (kg)

The B1KE-120 has a DHW boost function, and can go up to 120MBH for regular space heating and up to 140MBH for DHW.

Mobile applications and smart thermostats

Communication technology

ViCare App - Mobile applications for system users
Mobile operation of the heating system for heating and DHW.
Assistance functions and fault display with option for direct connection to a contractor for service requests.

- For more information on system requirements and ViCare app usage and registration, see https://www.viessmann.ca/en/services/viessmann-apps/vicare.html

1.1

Tools for service, maintenance and commissioning

ViGuide - mobile and web applications for trade partners
Service and maintenance with ViGuide for optimising workflow in the Viessmann trade partner's operation.
Guarantees customer-friendly online service for the system user, provided they have enabled service via the ViCare app.
Straightforward and efficient commissioning by heating contractors, of heat generators with integral communication module and battery storage systems with ViGuide.

In addition to the free version, paid-for versions ViGuide Pro and ViGuide Premium with additional analysis, remote maintenance and optimising functions are also available.

- For more information on system requirements and ViGuide usage and registration, see https://www.viessmann.ca/en/services/viessmann-apps/viguide.html

Neutralising systems		
Neutralization Kit NBT-23 Neutralization Kit up to 300 MBH Can be floor or wall mounted with supplied mounting brackets	7740 946 **132.–**	**Order No.** **USD**
Neutralization Granulate Neutralization Granulate (2 Lbs.) JJM	7740 948 **38.–**	**Order No.** **USD**

Low-Loss header		MG 0
Low-Loss Headers To decouple high flow rate systems from the boiler loop.		
Model 80/60 Low-Loss Header with insulation Max. flow rate 19.5 USGPM / 4.4 m3/hr	7498 529 **533.–**	**Order No.** **USD**
Model 120/80 Low-Loss Header with insulation Max. flow rate 35 USGPM / 8 m3/hr	7498 530 **799.–**	**Order No.** **USD**

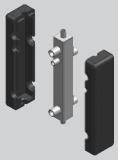

Single boiler stand Adjustable NEW		
Single boiler stand Adjustable For boilers up to 199. Designed for flexible installations, this stand offers adjustable height in a 12-inch (300 mm) increment, allowing for a customizable setup at 5 ft (1524 mm) or 6 ft (1824 mm).	7986 406 **722.–**	Order No. **USD**

Single Boiler Stand		
Single Boiler Stand For boilers up to 399	7560 569 **764.–**	**Order No.** **USD**

<-Return to contents

VITODENS 100-W

Vent Systems

1.1

Alternative Vent Systems

	Boiler Flue Gas Connection	60	80	110	Diameter
Rigid and Flexible PP(s) Venting [1]		*60 mm (2") Only Applicable for Vitodens 100 B1HE-85/120, B1KE-120* 60	80	110	Diameter
for Combustion Air Intake [4] *(only if installing ABS, CPVC or PVC piping for combustion air intake.*	Adaptor 3" to 2" or 3" to 4"	field supplied		field supplied	
CPVC Venting [2]		2"	3"	4"	Diameter
Flue Gas Outlet	Adaptor, CPVC 80mm to 3''	1 x 7134 770 **34.–**	1 x 7134 770 **34.–**	1 x 7134 770 **34.–**	Qty Order No. **USD**
	Adaptor 3" to 4"			field supplied	
Red. Bushing CPVC Hex Head	3" x 2"	9697 921 **27.–**			Order No. **USD**
Stainless Steel Venting [3]			3"	4"	Diameter
for Combustion Air Intake [4]	Adaptor 3" to 4"			field supplied	
for Flue Gas Outlet	PP(s) Adaptor for stainless steel			field supplied	

[1] *Coaxial and PP(s) vent material **must** be ULC S-636 certified for Category IV boilers: Centrotherm, Cox Geelen, or M&G Duravent.*
[2] *CPVC vent material **must** be ULC/UL listed for Category IV boilers. Suggested source: IPEX Inc.*
[3] *Stainless steel vent material **must** be ULC/UL listed for Category IV boilers.*
[4] *Combustion air supply pipe may be made of the following materials: PP(s), ABS, CPVC, or PVC.*
▶ *Always follow the installation instructions of the vent manufacturer and of Viessmann.*

Vent System [1]	Vent System Diameter		60/100	80/125	110/160	Diameter
Horizontally Vented	Maximum Equivalent Length (EqL)	**B1HE / B1KE**	**85 - 120** 43 / 13	**85 - 120** 98 / 30	**85 - 120** 118 / 36	ft. / m
		B1HE / B1KE		**150 - 199** 33 / 10	**150 - 199** 43 / 13	ft. / m
Room Air Independent Operation	**Basic Horizontal Vent Kit** Venting pieces can be ordered individually, or as a convenient kit using the Order No. to the right; Basic Vent Kit includes **one** of each of the items numbered ① to ⑤, and **two** Mounting Clips ⑥.		7571 783 **376.–** Adaptor, coaxial (CG) 7494 888 included	7571 784 **435.–**	7571 785 **728.–**	Order No. **USD**
	① **Boiler Vent Pipe Adaptor**		included with boiler			
	Adaptor, coaxial (CG) 80/125 to 60/100 not shown		7494 888 **47.–**	—	—	Order No. **USD**
	Adaptor, coaxial 80/125 to 110/160 not shown		—	—	7664 163 **172.–**	Order No. **USD**
	② **90° Elbow** EqL = 1.6ft. / 0.5m		7664 143 **47.–**	7664 144 **80.–**	7664 145 **118.–**	Order No. **USD**
	③ **Straight Pipe** [2] 3.3ft. / 1m		7664 140 **55.–**	7664 141 **69.–**	7664 142 **113.–**	Order No. **USD**
	④ **Vent Termination** 2.6ft. / 0.8m		7664 149 **109.–**	7664 150 **120.–**	7664 151 **207.–**	Order No. **USD**
	⑤ **Protective Screen** [1]		7725 656 **141.–**			Order No. **USD**
	⑥ **Mounting Clip** [2] (each)		7664 158 **17.–**	7664 159 **18.–**	7664 160 **23.–**	Order No. **USD**

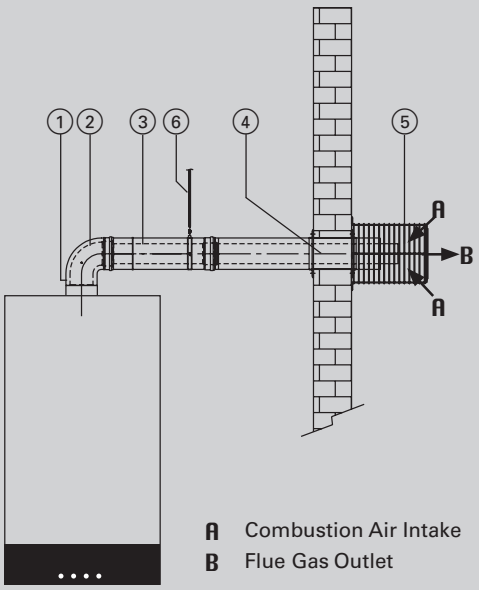

[1] *PP(s) coaxial vent material **must** be ULC S-636 certified for Category IV boilers. Do **not** mix non-ULC S-636 with ULC S-636 venting. Side wall venting installation **must** include Viessmann Protective Screen!*

[2] *Order **1** Mounting Clip for **each** straight length of vent pipe installed.*

▶ *Always follow the installation instructions of the vent manufacturer and of Viessmann.*

<-Return to contents

VITODENS 100-W

Coaxial PP(s) Vent System

1.1

Vent System [1]	Vent System Diameter		60/100	80/125	110/160	Diameter
Vertically Vented	Maximum Equivalent Length (EqL)	**B1HE / B1KE**	**85 - 120** 43 / 13	**85 - 120** 98 / 30	**85 - 120** 118 / 36	ft. / m
		B1HE / B1KE		**150 / 199** 33 / 10	**150 / 199** 43 / 13	ft. / m
Room Air Independent Operation	① **Boiler Vent Pipe Adaptor**		included with boiler			
	Adaptor, coaxial (CG) 80/125 to 60/100 not shown		7494 888 **47.–**	**—**	**—**	Order No. **USD**
	Adaptor, coaxial 80/125 to 110/160 not shown		**—**	**—**	7664 163 **172.–**	Order No. **USD**
	② **90° Elbow** EqL = 1.6ft. / 0.5m		7664 143 **47.–**	7664 144 **80.–**	7664 145 **118.–**	Order No. **USD**
	⑥ **Mounting Clip** [2] (each)		7664 158 **17.–**	7664 159 **18.–**	7664 160 **23.–**	Order No. **USD**
	⑨ **Straight Pipe** [2] 1.6ft. / 0.5m		7664 137 **41.–** ***or***	7664 138 **47.–** ***or***	7664 139 **88.–** ***or***	Order No. **USD**
	Straight Pipe [2] 3.3ft. / 1m		7664 140 **55.–**	7664 141 **69.–**	7664 142 **113.–**	Order No. **USD**
	⑩ **45° Elbow** (Set of 2) EqL = 1.0ft. / 0.3m		7664 146 **76.–**	7664 147 **86.–**	7664 148 **172.–**	Order No. **USD**
	⑪ **Vent Termination** 3.9ft. / 1.2m		7664 152 **137.–**	7664 153 **140.–**	7718 977 **335.–**	Order No. **USD**
	⑫ **Roof Flashing and Storm Collar** (B-Vent material or better)			field supplied		

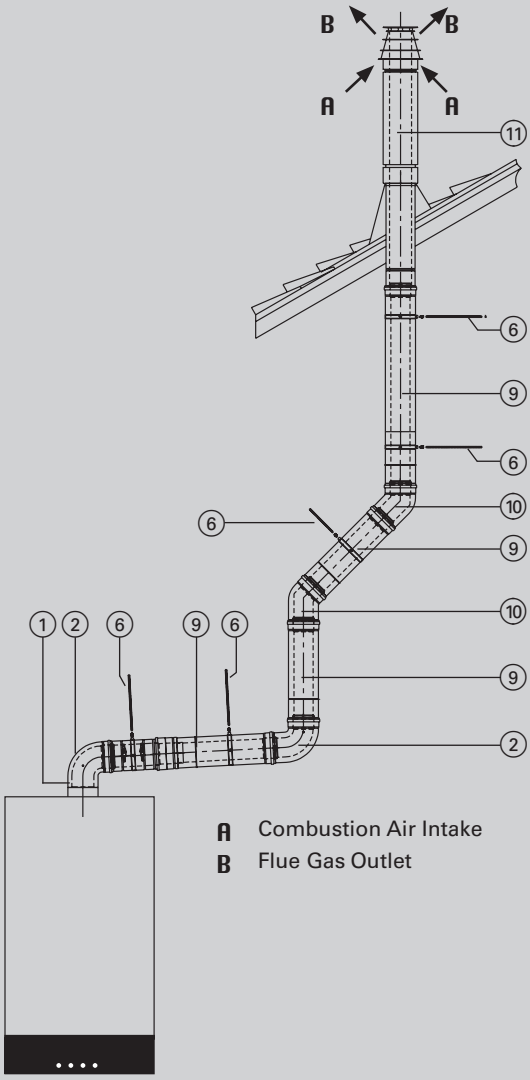

[1] *PP(s) coaxial vent material **must** be ULC S-636 certified for Category IV boilers. Do **not** mix non-ULC S-636 with ULC S-636 venting.*
[2] *Order **1** Mounting Clip for **each** straight length of vent pipe installed.*
▶ *Always follow the installation instructions of the vent manufacturer and of Viessmann.*

Limited Lifetime Warranty
on stainless steel heat exchangers for gas condensing boilers up to 199 MBH

Wall mounted gas condensing boiler
8.5 to 199 MBH / 2.5 to 58.3 kW

Vitodens 200-W
B2HE Series

Wall mounted gas condensing boiler
With modulating MatriX-Plus burner, room air independent operation (using a direct vent system) or room air dependent operation.

For natural gas and LPG
Finish: Vitopearlwhite

- Wall-Mounted Condensing Boiler with modulating MatriX plus-cylinder burner for room air dependent operation or room air independent operation
- Lasting Performance with industry-leading Viessmann made stainless steel Inox-Radial heat exchanger constructed to CSA B51 and ASME Section IV.
- Fast Installation and Reduced Maintenance with Lambda ProPlus, industry-first intelligent combustion management system: Adjusts with the push of a button to gas type and quality. No fuel conversion kit required.
- Extremely Quiet Operation; quieter than most refrigerators. True High-Altitude Operation up to 10,000 ft. (3,000 m) with simple electronic adjustment. 95% A.F.U.E.
- Low start/stop frequency even with low heat dissipation due to pause time optimization and large modulation range of up to 1:14.
- 7-inch color touch display with plain text and graphic display, commissioning wizard, displays for energy consumption, and alternatively operation via mobile terminal device.
- Internet-capable thanks to integrated Wifi interface for operation and service via Viessmann apps.
- Simultaneously operating up to four heating circuits and three thermostat zones with individual heating curves
- Up to 16 Vitodens 200-W, B2HE units can be combined in a single prefabricated cascade system - meeting inputs from 170 MBH to 2985 MBH - utilizing the integrated cascade controller, standard on each unit.
- Building Automation System Integration w/ optional Gateway accessories.
- On-board message center for faults, warnings, and updates selectable in three languages.

<-Return to contents

Gas condensing system boiler
Room air independent operation (using a direct vent system) or room air dependent operation

Heating system

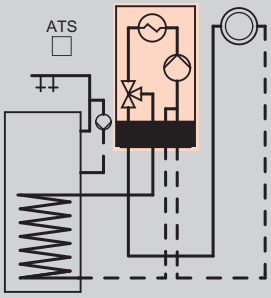

1 heating circuit without mixer

Control unit

For constant temperature and weather-compensated operation

With 7" colour touchscreen
Connectivity via integral WiFi interface
With connection option for a DHW recirculation pump
For multiple heating circuits see accessories

An outside temperature sensor is included for weather-compensated operation.

1.2

Notes:
The boilers are preset for natural gas. The conversion to LPG is made at the programming unit (a conversion kit is therefore not required). **B2HE does not come with a LLH sensor included in the box.**

Standard delivery/equipment level

- Modulating, fan-assisted premix burner with Lambda Pro Plus
- Control unit with integral WiFi interface
- Integral safety valves
- Variable speed high efficiency circulation pump and 3-way valve (for connecting a DHW tank)
- Fully plumbed and wired
- Boiler flue connection
- Outside temperature sensor
- Standard pressure relief valve 30 psig
- Optional 45 psig pressure relief valve 9549 944, ***66.***– USD
- (BxxE 150-199 only) Optional 60 psig pressure relief valve 9560 183, ***66.***– USD

Fuel					
Input	**B2HE-85**	**B2HE-120**	**B2HE-150**	**B2HE-199**	
(NG)MBH	8.5-85	8.5-120	14-150	14-199	
kW	2.5-24.9	2.5-35.2	4.1-44.0	4.1-58.3	
(LPG)MBH	14-85	14-120	22.7-150	22.7-199	
kW	4.1-24.9	4.1-35.2	6.7-44.0	6.7-58.3	
	7722 778 **5,976.–**	7722 779 **6,177.–**	7722 780 **7,342.–**	7722 781 **8,702.–**	Order No. **USD**
Specification					
Length	19¾ (500)	19¾ (500)	21¾ (550)	21¾ (550)	in (mm)
Width	17¾ (450)	17¾ (450)	17¾ (450)	17¾ (450)	in (mm)
Height	33¾ (859)	33¾ (859)	39 (989)	39 (989)	in (mm)
Weight	108 (49)	108 (49)	179 (81)	179 (81)	lbs (kg)

Neutralising systems		
Neutralization Kit NBT-23 Neutralization Kit to 300 MBH	7740 946 **132.–**	Order No. **USD**
Neutralization Granulate Neutralization Granulate (2 Lbs.) JJM	7740 948 **38.–**	Order No. **USD**

Low-Loss header		
Low-Loss Headers **to decouple high flow rate systems from the boiler loop.** **Model 80/60 Low-Loss Header with insulation** **Max. flow rate 19.5 USGPM / 4.4 m3/hr** 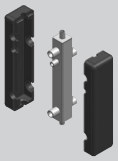 **Model 120/80 Low-Loss Header with insulation** **Max. flow rate 35 USGPM / 8 m3/hr**	7498 529 **533.–** 7498 530 **799.–**	Order No. **USD** Order No. **USD**
Immersion temperature sensor (for Low-Loss header) To capture the Low-Loss header temperature.	7179 488 **227.–**	Order No. **USD**

Single boiler stand Adjustable NEW		
Single boiler stand Adjustable For boilers up to 199. Designed for flexible installations, this stand offers adjustable height in 6-inch (150 mm) increments, allowing for a customizable setup at 5 ft (1524 mm), 5.5 ft (1674 mm), or 6 ft (1824 mm).	7986 406 **722.–**	Order No. **USD**

Single boiler stand		
Single boiler stand For boilers up to 199.	7560 569 **764.–**	Order No. **USD**

<-Return to contents

VITODENS 200-W

Control unit accessories

Accessories

Remote controls

Vitotrol 200-E Hardwired remote control unit (PlusBus subscriber). With backlit graphic display with plain text. For setting the following functions for one, two, three or up to 4 heating circuits: **Hardwired** communication with the boiler Time programs for heating circuits and DHW tanks Comfort functions, e.g. holiday program/holiday at home program Specification of the set DHW temperature and up to 3 set values for the room temperature With integral room temperature sensor for room temperature hook-up (only for one heating circuit with mixer) The display shows the outside temperature, room temperature and operating conditions. If the Vitotrol 200-E is to be used for room temperature hook-up, site the device in a main living room (lead room). Order room temperature sensor, part no. 7438537, if the Vitotrol 200-E cannot be sited in a suitable location to capture the room temperature. *Max. 2 Vitotrol 200-E per heat generator.*	7372 087 **531.–**	Order No. **USD**

Accessories

Room temperature sensor (NTC 10 kOhm) In an enclosure for wall mounting *To supplement the Vitotrol 200-E* *If the Vitotrol 200-E cannot be sited in a suitable location to capture the room temperature.*	7438 537 **206.–**	Order No. **USD**

Accessories

Heating circuit control unit extension

EM-M1 mixing valve extension kit (wall mounting maximum of 3) (PlusBus subscriber) For one heating circuit with mixing valve, fully wired. Includes valve mounted 120VAC mixing valve motor for Viessmann 3 and 4 way mixing valves Flow temperature sensor as contact temperature sensor (NTC 10 kOhm) with connecting lead (5.8 m long) and plug Plug for heating circuit pump and mixing valve motor Power cable and PlusBus cable with plug With immersion temperature sensor connector for Low-Loss header (immersion temperature sensor must be ordered separately)		ZK06488 **1,030.–**	Order No. **USD**

Function extensions

EM-P1 extension (PlusBus subscriber) Function extension inside enclosure for wall mounting. Connection for heating circuit pump for the heating circuit without mixing valve Connection for DHW circulation pump Immersion temperature sensor connector for Low-Loss header (immersion temperature sensor must be ordered separately) *Required for e.g. a single heating circuit without mixing valve with Low-Loss header (separate heating circuit pump).*		7956 969 **560.–**	Order No. **USD**
EM-S1 extension (PlusBus subscriber) Function extension inside enclosure for wall mounting. Electronic temperature differential control for dual mode DHW heating and simple central heating backup using solar collectors With output statement and diagnostic system Solar circuit pump speed control with PWM input Suppression of DHW cylinder reheating by the boiler subject to solar yield		7956 971 **604.–**	Order No. **USD**
EM-EA1 extension (PlusBus subscriber) Function extension inside enclosure for wall mounting. Using the inputs and outputs allows **one** of the following functions to be achieved. Up to **max. 3** EM-EA1 extensions can be connected to a boiler. Connection of an external solenoid valve External extractor interlock Fault message input 24 V and block system Fault message input 120 V and block system Fault message output Operating mode changeover (all heating circuits) Input 0 - 10 V for external temperature demand *Required for connection of fault messages, e.g. from the condensate removal pump.*		7956 970 **680.–**	Order No. **USD**

Viessmann 3-Way Mixing Valves		¾″ 7134 742 **518.–**	1″ 7134 743 **550.–**	1¼″ 7134 744 **621.–**	1½″ 7134 745 **694.–**	2″ 7134 746 **818.–**	Dia Order No. **USD**

<-Return to contents

VITODENS 200-W

WAGO communication technology

Wago Communication Technology

Wago Gateway

Wago BACnet/IP Gateway Wall-Mount	7959 026 **1,330.–**	Order No. **USD**
Wago BACnet/IP with MSTP Router Gateway Wall-Mounted	7959 025 **1,820.–**	Order No. **USD**
Wago MB/RTU Gateway Wall-Mount	7959 027 **1,330.–**	Order No. **USD**
Wago MB/TCP Gateway Wall-Mount	7959 028 **1,330.–**	Order No. **USD**

Alternative Vent Systems

	Boiler Flue Gas Connection	60	80	110	Diameter
Rigid and Flexible PP(s) Venting [1]		*60 mm (2") Only Applicable for Vitodens 200 B2HE-85/120* 60	80	110	Diameter
for Combustion Air Intake [4] *(only if installing ABS, CPVC or PVC piping for combustion air intake.*	Adaptor 3" to 2" or 3" to 4"	field supplied		field supplied	
CPVC Venting [2]		2"	3"	4"	Diameter
Flue Gas Outlet	Adaptor, CPVC 80mm to 3'' Adaptor 3" to 4"	1 x 7134 770 **34.–**	1 x 7134 770 **34.–**	1 x 7134 770 **34.–** field supplied	Qty Order No. **USD**
Red. Bushing CPVC Hex Head	3" x 2"	9697 921 **27.–**			Order No. **USD**
Stainless Steel Venting [3]			3"	4"	Diameter
for Combustion Air Intake [4]	Adaptor 3" to 4"			field supplied	
for Flue Gas Outlet	PP(s) Adaptor for stainless steel			field supplied	

[1] *Coaxial and PP(s) vent material **must** be ULC S-636 certified for Category IV boilers: Centrotherm, Cox Geelen, or M&G Duravent.*
[2] *CPVC vent material **must** be ULC/UL listed for Category IV boilers. Suggested source: IPEX Inc.*
[3] *Stainless steel vent material **must** be ULC/UL listed for Category IV boilers.*
[4] *Combustion air supply pipe may be made of the following materials: PP(s), ABS, CPVC, or PVC.*
► *Always follow the installation instructions of the vent manufacturer and of Viessmann.*

Up to 4 x Vitodens 200, B2HE Series boilers of the same size may be common vented:
- for 2 boilers, order Common Venting Kit 7956 972, List Price 668.– USD
- for 3 boilers, order Common Venting Kit 7956 973, List Price 979.– USD
- for 4 boilers, order Common Venting Kit 7956 974, List Price 1,290.– USD

<-Return to contents

VITODENS 200-W

Coaxial PP(s) Vent System

Vent System [1]	Vent System Diameter		60/100	80/125	110/160	Diameter
Horizontally Vented	Maximum Equivalent Length (EqL)	**B2HE**	**85 - 120** 43 / 13	**85 - 120** 98 / 30	**85 - 120** 118 / 36	ft. / m
		B2HE		**150 - 199** 33 / 10	**150 - 199** 43 / 13	ft. / m
Room Air Independent Operation	**Basic Horizontal Vent Kit** Venting pieces can be ordered individually, or as a convenient kit using the Order No. to the right; Basic Vent Kit includes **one** of each of the items numbered ① to ⑤, and **two** Mounting Clips ⑥. **Basic Vent Kit** Basic Vent Kit (CG) 60/100 BxxE 85-120		7571 783 **376.–** Adaptor, coaxial (CG) 7494 888 included	7571 784 **435.–**	7571 785 **728.–**	Order No. **USD**
	① **Boiler Vent Pipe Adaptor**		included with boiler			
	Adaptor, coaxial (CG) 80/125 to 60/100 not shown		7494 888 **47.–**	–	–	
	Adaptor, coaxial 80/125 to 110/160 not shown		–	–	7664 163 **172.–**	Order No. **USD**
	② **90° Elbow** EqL = 1.6ft. / 0.5m		7664 143 **47.–**	7664 144 **80.–**	7664 145 **118.–**	Order No. **USD**
	③ **Straight Pipe** [2] 3.3ft. / 1m		7664 140 **55.–**	7664 141 **69.–**	7664 142 **113.–**	Order No. **USD**
	④ **Vent Termination** 2.6ft. / 0.8m		7664 149 **109.–**	7664 150 **120.–**	7664 151 **207.–**	Order No. **USD**
	⑤ **Protective Screen** [1]		7725 656 **141.–**			Order No. **USD**
	⑥ **Mounting Clip** [2] (each)		7664 158 **17.–**	7664 159 **18.–**	7664 160 **23.–**	Order No. **USD**

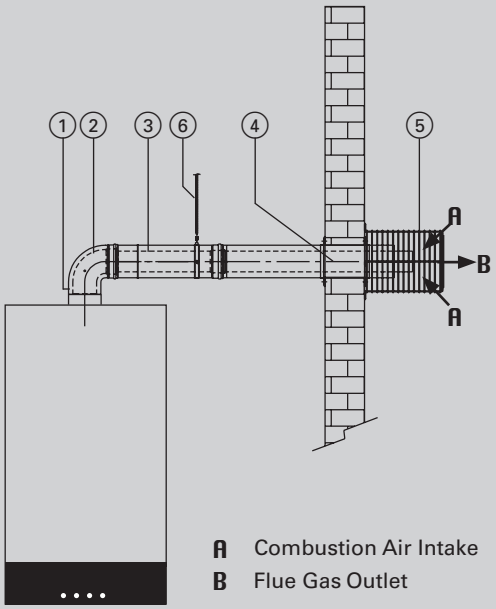

[1] *PP(s) coaxial vent material **must** be ULC S-636 certified for Category IV boilers. Do **not** mix non-ULC S-636 with ULC S-636 venting. Side wall venting installation **must** include Viessmann Protective Screen!*

[2] *Order **1** Mounting Clip for **each** straight length of vent pipe installed.*

▶ *Always follow the installation instructions of the vent manufacturer and of Viessmann.*

Vent System [1]

Vertically Vented

Room Air Independent Operation

Important!
As a starting point, please pay attention to boiler vent connection size shown on page 2.2-8 and 9

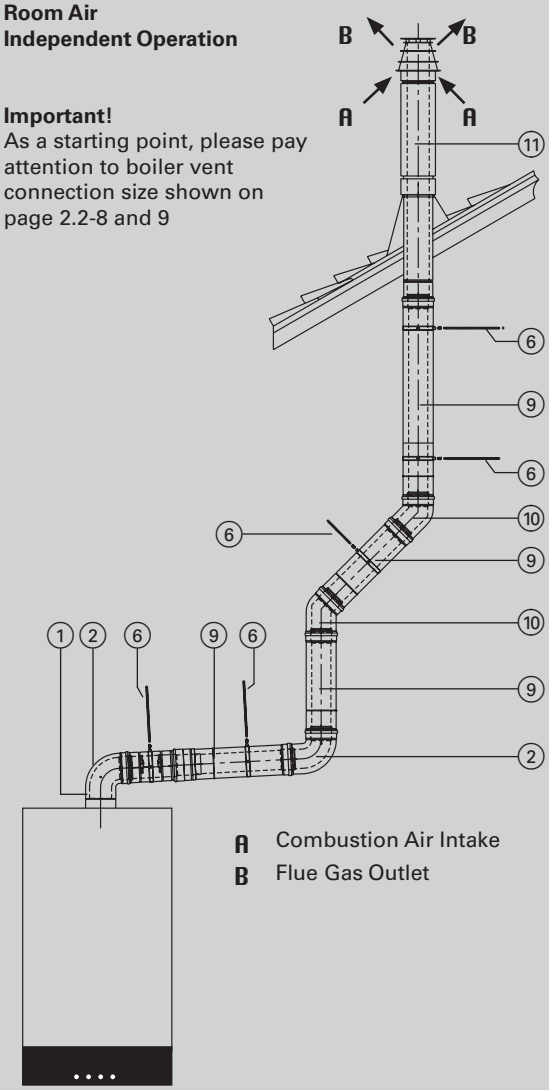

Vent System Diameter		60/100	80/125	110/160	Diameter
Maximum Equivalent Length (EqL)	B2HE	**85 - 120** 43 / 13	**85 - 120** 98 / 30	**85 - 120** 118 / 36	ft. / m
	B2HE		**150 - 199** 33 / 10	**150 - 199** 43 / 13	ft. / m
Boiler Vent Pipe Adaptor		included with boiler			
Adaptor, coaxial 80/125 to 110/160		—	—	7664 163 **172.–**	Order No. **USD**
Adaptor, coaxial Coaxial Adaptor (CG) 80/125 to 60/100		7494 888 **47.–**	—	—	Order No. **USD**
② **90° Elbow** EqL = 1.6ft. / 0.5m		7664 143 **47.–**	7664 144 **80.–**	7664 145 **118.–**	Order No. **USD**
⑥ **Mounting Clip** [2] (each)		7664 158 **17.–**	7664 159 **18.–**	7664 160 **23.–**	Order No. **USD**
⑨ **Straight Pipe** [2] 1.6ft. / 0.5m **Straight Pipe** [2] 3.3ft. / 1m		7664 137 **41.–** ***or*** 7664 140 **55.–**	7664 138 **47.–** ***or*** 7664 141 **69.–**	7664 139 **88.–** ***or*** 7664 142 **113.–**	Order No. **USD** Order No. **USD**
⑩ **45° Elbow** (Set of 2) EqL = 1.0ft. / 0.3m		7664 146 **76.–**	7664 147 **86.–**	7664 148 **172.–**	Order No. **USD**
⑪ **Vent Termination** 3.9ft. / 1.2m		7664 152 **137.–**	7664 153 **140.–**	7718 977 **335.–**	Order No. **USD**
⑫ **Roof Flashing and Storm Collar** (B-Vent material or better)		field supplied			

[1] *PP(s) coaxial vent material **must** be ULC S-636 certified for Category IV boilers. Do **not** mix non-ULC S-636 with ULC S-636 venting.*
[2] *Order **1** Mounting Clip for **each** straight length of vent pipe installed.*
► *Always follow the installation instructions of the vent manufacturer and of Viessmann.*

Gas-fired, stainless steel condensing boiler
71 to 530 MBH / 21 to 155 kW

Vitodens 200-W ®
B2HA Series

Wall-Mounted Condensing Boiler
with modulating MatriX-cylinder burner
for room air dependent operation
or room air independent operation
Heating input: 71 to 530 MBH 21 to 155 kW

For natural gas or liquid propane gas

- **Lasting Performance** with industry-leading Viessmann made SA240 316Ti stainless steel Inox-Radial heat exchanger constructed to CSA B51 and ASME Section IV.
- **Fast Installation and Reduced Maintenance** with Lambda Pro, industry-first intelligent combustion management system: Adjusts automatically to gas type and quality. No fuel conversion kit required.
- **Expanded Application Range** with increased capacity up to 530 MBH (155 kW). Multi-boiler installation up to 4240 MBH (1240 kW) with up to 8 boilers (model size 285-530).
- **Extremely Quiet Operation**; quieter than most refrigerators.
- **True High-Altitude Operation** up to 10,000 ft. (3,000 m) with simple electronic adjustment.
- **Efficiency** of up to 98% through intensive condensation.

®This trademark is registered with the U.S. Patent and Trademark Office.

<-Return to contents

VITODENS 200-W

1.3

Vitodens 200-W	B2HA 285	B2HA 311	B2HA 352	B2HA 399	B2HA 530	Model No.
Single or Multiple Boiler Installations						
Vitodens 200-W with Vitotronic 200 HO1B	B2HAH12	B2HAH13	B2HAH14	B2HAA94	B2HAA95	Order No.
NG Input Range [1]	71-285 21-83	71-311 21-91	71-352 21-103	113-399 33-117	113-530 33-155	MBH kW
NG Output Range	65-260 19-76	67-294 20-86	67-333 20-98	103-375 30-110	103-495 30-145	MBH kW
LPG Input Range [1]	104-258 30-83	104-311 30-91	104-352 30-103	113-399 33-117	113-530 33-155	MBH kW
LPG Output Range	95-260 28-76	98-294 29-86	98-333 29-98	103-375 30-110	103-495 30-145	MBH kW
List Price NG / LP	**10,967.–**	**11,437.–**	**12,197.–**	**13,056.–**	**16,161.–**	**USD**

Technical Data						
A.F.U.E.	92.0					%
CSA / AHRI Efficiency		94.5	94.5	93.9	93.5	%
Dimensions						
Length	21 530	21 530	21 530	27.1 689	27.1 689	inches mm
Width	19 480	19 480	19 480	23 5/8 600	23 5/8 600	inches mm
Height	43½ 1105	43½ 1105	43½ 1105	44½ 1128	44½ 1128	inches mm
Boiler Vent Connection flue gas / fresh air Ø	110/150	110/150	110/150	110/150	110/150	mm
Standard Pressure Relief Valve	30	30	30	80	80	psig
Shipping Weight (incl. fittings)	248	248	248	368	368	lbs
not including vent system	112	112	112	167	167	kg

[1] *Altitude de-rations:*

B2HA 285	*altitude: 10 000 ft*	*de-ration: 21%*
B2HA 311, 352 and 399	*5 000 ft*	*14%*
B2HA 311, 352 and 530	*10 000 ft*	*29%*
B2HA 399	*10 000 ft*	*13%*

Standard Equipment:
Wall-mount boiler, Vitotronic 200 HO1B, and installation fittings c/w pressure relief valve, temperature sensors (outdoor, LLH, and DHW), gas shut-off valve, two fill/drain valves, thermometer, and mounting hardware.
B2HA 530 also includes low gas pressure switch kit.

Optional 60 psi pressure relief valves for 285 to 352, *order 9549 269,* ***List Price 201.–.***

Accessories	B2HA 285	B2HA 311	B2HA 352	B2HA 399	B2HA 530	Model No.
Heating Circuit						
Circulation Pump [1] Boiler delta T Grundfos 3-speed, flanged housing circulation pump, 115V		7248 585 40°F UPS26-99FC **518.–**		7441 596 30°F UPS26-150F **983.–**		Order No. Model **USD**
Flange Set, 1½ *(Others available, please inquire)*			9544 424 **57.–**			Order No. **USD**
Harness Kit for 0-10VDC variable speed pump *(only for Vitodens 200-W sizes 160 to 530)*			7661 178 **26.–**			Order No. **USD**
Low-Loss Header with Insulation to decouple high flow rate systems from the boiler loop Max. Flow	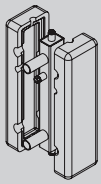		120/80 35 USGPM 8 m^3/hr 7498 530 **799.–**			Model Order No. **USD**
LLH Temperature Sensor [2] (Immersion) to measure the temperature inside a low-loss header			7179 488 **227.–** Standard Equipm.			Order No. **USD**
Boiler Stand for free-standing installation of a single boiler within the mechanical room	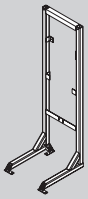	7560 569 **764.–**		7658 026 **1,230.–** (unassembled)		Order No. **USD**
Neutralization System • to neutralize acidic condensate • includes 18 lbs / 8 kg neutralization pellets			7740 947 **437.–**			Order No. **USD**
Neutralization Pellets 18 lbs / 8 kg			7740 949 **146.–**			Order No. **USD**
Service for Vitodens boilers						
• **Service Tool Set**			7725 667 **397.–**			Order No. **USD**
• **Cleaning Kit** for the fire side of the boiler heat exchanger			7883 995 **78.–**			Order No. **USD**
• **Replacement Blades** for Cleaning Kit (above); set of 5			7840 346 **66.–**			Order No. **USD**

[1] *Separate circulation pump required for each boiler.*
Select based upon system pressure drop and flow rate requirement - see Vitodens Technical Data Manual.
Many other circulation pumps available - please inquire.

[2] *This sensor is now standard equipment of each Vitodens 200-W.*

[3] *Engineered seismic restraint kits, which comply with local seismic requirements, are available from Viessmann.*
For Boiler Stand 7658 026 (only), order 7727 770, ***List Price 384.–.***

<-Return to contents

VITODENS 200-W

Accessories

Accessories

Sensors

Room Temperature Sensor (wall mount, NTC 10 kOhm) for use with Vitotrol 300-A *Order Room Temperature Sensor if Vitotrol 300-A cannot be installed in a centralized location to measure room temperature.*		7438 537 **206.–**	Order No. **USD**
DHW Temperature Sensor (Immersion, NTC 10 kOhm) [1] to measure the temperature inside a domestic hot water storage tank		7179 114 Standard Equipm.	Order No. **USD**

1.3

Expanded Functions

Extension Module AM1 wall-mounted extension module controls up to 2 of the following circulation pumps: • DHW recirculation pump • DHW production pump • heating circuit pump for the circuit without a mixing valve • 120V, 60Hz, 4A in CSA housing, with 6.5′ / 2m cord and 120V plug *Maximum 1 Extension Module AM1 per boiler.* *For single-boiler applications only (**not** for use with Vitotronic 300-K, MW2C).*		7533 425 **615.–**	Order No. **USD**

[1] *This sensor is now standard equipment of each Vitodens 200-W.*

Accessories

Low-Temperature Heating Circuits

Mixing Valve Extension Kit consisting of: **Mixing Valve Module** (KM-BUS participant, wall mount) • plugs for circulation pump and mixing valve motor • KM-BUS plug • 120V, 60Hz, 2A in CSA housing, with 6.5′ / 2m cord and 120V plug **Mixing Valve Motor**, 120/1/60 • for Viessmann 3- and 4-way mixing valves only • including strap-on supply temperature sensor (NTC 10 kOhm) • Maximum 2 Mixing Valve Extensions per Vitodens boiler in single boiler applications	ZK01105 **1,192.–**	Order No. **USD**

Viessmann 3-Way Mixing Valves	¾″ 7134 742 **518.–**	1″ 7134 743 **550.–**	1¼″ 7134 744 **621.–**	1½″ 7134 745 **694.–**	2″ 7134 746 **818.–**	Dia Order No. **USD**

<-Return to contents

VITODENS 200-W

Accessories

Accessories

Remote Controls

Vitotrol 200-A (KM-BUS protocol) User interface to operate one heating circuit: • daytime temperature and operating program • with party and energy-saving button • display indication of outside temperature, room temperature and operational settings • with room temperature sensor for room-dependent activation (for heating circuit with mixing valve only) If the Vitotrol 200-A is to operate based upon room-dependent activation, ensure placement in a **centralized** location. *Maximum 2 Vitotrols per Vitotronic.*		7438 363 **314.–**	Order No. **USD**
Vitotrol 300-A (KM-BUS protocol) User interface to operate one, two or three heating circuits: ■ daytime temperature, set-back temperature, DHW temperature, operating and holiday program, as well as party and energy-saving function ■ timer program for heating circuits, DHW production, and DHW recirculation pump ■ illuminated graphic display to show outdoor temperature, room temperature, operational settings together with descriptive texts ■ with room temperature sensor for room-dependent activation (for heating circuit with mixing valve only) If the Vitotrol 300-A is to operate based upon room-dependent activation, ensure placement in a **centralized** location. Order Room Temperature Sensor 7438537 if the Vitotrol 300-A cannot be installed in a centralized location. *Maximum 2 Vitotrols per Vitotronic.*		7571 231 **529.–** 7438 537 **206.–**	Order No. **USD** Order No. **USD**

Other

Wall-Mount Base to reposition the programming unit outside of the Vitotronic 200 HO1B • mounting base • blind cover • connection cable		7299 408 **223.–**	Order No. **USD**
KM-BUS Expansion Module to connect between 2 and 9 additional devices to the KM-BUS		7133 393 **201.–**	Order No. **USD**

Accessories

Solar DHW Production and Supplemental Heating

Solar Module SM1 wall-mounted extension module with electronic differential control for dual-coil DHW production and to supplement space heating using solar collectors when used with oil/gas-fired heating boilers. • heating output balancing and diagnostic system • operation and display via boiler control • management of two tank systems from one collector field • second electronic differential control • thermostat function for supplemental heating or use of surplus heat • variable speed pump controller for solar circuit pump via pulse-width control, or for solar circuit pump with PWM-input (mfg Grundfos) • solar-dependent management of the DHW storage tank, while suppressing the boiler • solar-dependent management of the space heating circuit, while suppressing the boiler • includes one tank sensor and one collector sensor • 120V, 60Hz, 2A in CSA housing, with 6.5' / 2m cord and 120V plug	7533 427 **859.–**	Order No. **USD**
Order immersion sensor 7438 702 if the following features are required: • for circulation management in systems with 2 storage tanks • for return flow management between boiler and hot water buffer tank • to supply heat to additional accessories	7438 702 **201.–**	Order No. **USD**

Communication

LON Connecting Cable, 23ft / 7m for data exchange between controls	7143 495 **87.–**	Order No. **USD**
LON Extension Jack to extend LON Connecting Cable	7143 496 **84.–**	Order No. **USD**
LON Connecting Terminal (RJ, 2 Pieces) to connect to field cabling via wall-mount boxes 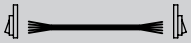	7171 784 **164.–**	Order No. **USD**
LON Terminal Resistor (2 Pieces) to terminate the system BUS, a resistor must be installed on each free end	7143 497 **28.–**	Order No. **USD**
LON Communication Module electronic circuit board enabling data communication via Viessmann LON system BUS. For installation inside Vitodens 200-W. 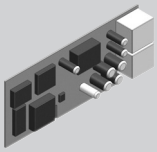	7179 113 **595.–**	Order No. **USD**

<-Return to contents

VITODENS 200-W

Coaxial PP(s) Vent System

Vent System [1]	Vent System Diameter	110/160	Diameter
	B2HA	**285-352** 50 / 15	ft. / m
	B2HA	**399** 26 / 8	ft. / m
	B2HA	**530** 16 / 5	ft. / m
Room Air Independent Operation **Important!** As a starting point, please pay attention to boiler vent connection size shown on page 2.2-18 and 19	**Basic Horizontal Vent Kit** Venting pieces can be ordered individually, or as a convenient kit using the Order No. to the right; Basic Vent Kit includes **one** of each of the items numbered ① to ⑤, and **two** Mounting Clips ⑥.	7571 785 **728.–**	Order No. **USD**
	① **Flue Transition** 110/150 to 110/160 not shown	7664 164 **133.–**	Order No. **USD**
	② **90° Elbow** EqL = 1.6ft. / 0.5m	7664 145 **118.–**	Order No. **USD**
	③ **Straight Pipe** [2] 3.3ft. / 1m	7664 142 **113.–**	Order No. **USD**
	④ **Vent Termination** 2.6ft. / 0.8m	7664 151 **207.–**	Order No. **USD**
	⑤ **Protective Screen** [1]		Order No. **USD**
	⑥ **Mounting Clip** [2] (each)	7664 160 **23.–**	Order No. **USD**

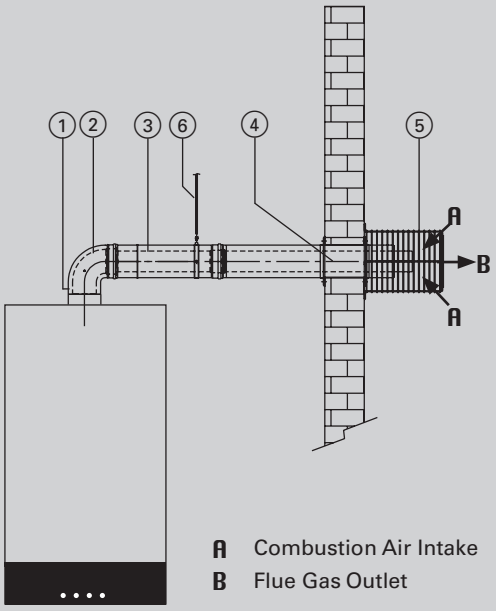

[1] *PP(s) coaxial vent material **must** be ULC S-636 certified for Category IV boilers. Do **not** mix non-ULC S-636 with ULC S-636 venting. Side wall venting installation **must** include Viessmann Protective Screen!*

[2] *Order **1** Mounting Clip for **each** straight length of vent pipe installed.*

▶ *Always follow the installation instructions of the vent manufacturer and of Viessmann.*

▶ *Boiler vent pipe adapter included with B2HA boiler.*

Vent System [1]

Room Air Independent Operation

Important!
As a starting point, please pay attention to boiler vent connection size shown on page 2.2-18 and 19

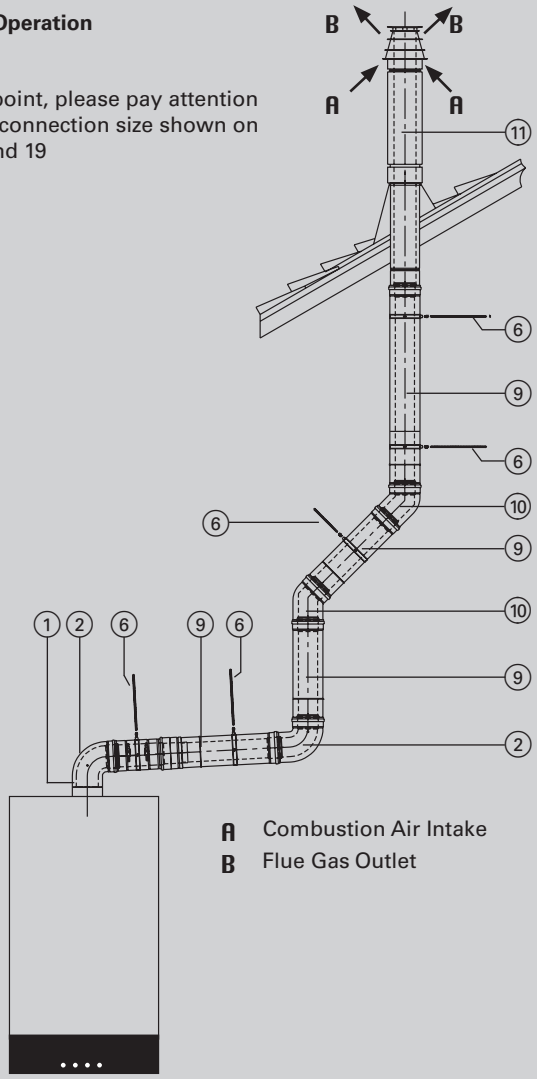

Vent System Diameter		110/160	Diameter
Maximum Equivalent Length (EqL)	**B2HA**	**285-352** 43 / 13	ft. / m
	B2HA	**399** 26 / 8	ft. / m
	B2HA	**530** 16 / 5	ft. / m
Boiler Vent Pipe Adaptor			
① **Flue Transition** 110/150 to 110/160 not shown		7664 164 **133.–**	Order No. **USD**
② **90° Elbow** EqL = 1.6ft. / 0.5m		7664 145 **118.–**	Order No. **USD**
⑥ **Mounting Clip** [2] (each)		7664 160 **23.–**	Order No. **USD**
⑨ **Straight Pipe** [2] 1.6ft. / 0.5m **Straight Pipe** [2] 3.3ft. / 1m		7664 139 **88.–** ***or*** 7664 142 **113.–**	Order No. **USD** Order No. **USD**
⑩ **45° Elbow** (Set of 2) EqL = 1.0ft. / 0.3m		7664 148 **172.–**	Order No. **USD**
⑪ **Vent Termination** 3.9ft. / 1.2m		7718 977 **335.–**	Order No. **USD**
⑫ **Roof Flashing and Storm Collar** (B-Vent material or better)			

[1] *PP(s) coaxial vent material **must** be ULC S-636 certified for Category IV boilers. Do **not** mix non-ULC S-636 with ULC S-636 venting.*
[2] *Order **1** Mounting Clip for **each** straight length of vent pipe installed.*
▶ *Always follow the installation instructions of the vent manufacturer and of Viessmann.*
▶ *Boiler vent pipe adapter included with B2HA boiler.*

<-Return to contents

VITODENS 200-W

Alternative Vent Systems

Alternative Vent Systems

	Boiler Flue Gas Connection	110	Diameter
Coaxial Venting [1]	See previous 2 pages	110/160	
Rigid and Flexible PP(s) Venting [1]		110	Diameter
For Combustion Air Intake [4] B2HA 285 to 530	If installing ABS, CPVC or PVC piping for combustion air intake, please order **one** CPVC Adaptor per boiler	110>4" 7134 771 **48.–**	Size Order No. **USD**
B2HA 285 to 530 for Combustion Air Intake [4] and for Flue Gas Outlet	Double-Pipe Adaptor 110/150 to 110/110	7373 253 **298.–**	Order No. **USD**
	Starter Adaptor 110/100	field supplied	Order No. **USD**
CPVC Venting [2]		4"	Diameter
B2HA 285 to 530 for Combustion Air Intake [4] and for Flue Gas Outlet	Double-Pipe Adaptor 110/150 to 110/110	7134 771 **48.–**	Order No. **USD**
	Adaptor, CPVC 110mm to 4''	2 x 7134 771 **48.–**	Qty Order No. **USD**
Stainless Steel Venting [3]		4"	Diameter
B2HA 285 to 530 for Combustion Air Intake [4] and for Flue Gas Outlet	Double-Pipe Adaptor 110/150 to 110/110	7373 253 **298.–**	Order No. **USD**
	Starter Adaptor, PPs 10/4"	field supplied	Order No. **USD**

*[1] Coaxial and PP(s) vent material **must** be ULC S-636 certified for Category IV boilers: Centrotherm, Cox Geelen, or M&G Duravent.*
*[2] CPVC vent material **must** be ULC/UL listed for Category IV boilers. Suggested source: IPEX Inc.*
*[3] Stainless steel vent material **must** be ULC/UL listed for Category IV boilers.*
[4] Combustion air supply pipe may be made of the following materials: PP(s), ABS, CPVC, or PVC.

- *Always follow the installation instructions of the vent manufacturer and of Viessmann.*
- *Up to 4 x Vitodens 200, B2HA Series boilers of the same size may be common vented, each boiler connected to the common venting system requires the use of a common venting kit, order one kit per boiler; B2HA 285 kit # 7995 375, b2HA 311 kit # 7995 374, B2HA 352 kit # 7995 373, B2HA 399 kit 7995 372, B2HA 530 kit # 7995 371*

Vitocrossal 300 ®
CU3A Series

Gas-Fired Floor-Standing Condensing Boiler
with modulating MatriX-Dome burner
and Lambda Pro control system
for room air dependent operation
or room air independent operation
Heating input: 19 to 199 MBH 5.6 to 58 kW

For natural gas or liquid propane gas

- Highest efficiency of 95.0% A.F.U.E. efficiency on all models.
- Lasting performance with industry-leading Viessmann made SA240 316Ti stainless steel Inox-Crossal heat exchanger constructed to CSA B51 and ASME Section IV.
- Fast installation and reduced maintenance with Lambda Pro, industry-first intelligent combustion management system.
- MatriX Dome gas burner with wide modulation range up to 5:1 ensures extremely high efficiency and ideal load matching capability.
- Large water volume extends burner run time, eliminates short cycling and simplifies installation.
- On-board Vitotronic control features a graphical user interface for straightforward, menu-driven programming and operation.
- Room air dependent or room air independent operation.

®This trademark is registered with the U.S. Patent and Trademark Office.

<-Return to contents

VITOCROSSAL 300

Vitocrossal 300		CU3A 94	CU3A 125	CU3A 160	CU3A 199	Model No.
Single Boiler Packages						
Vitocrossal 300, CU3A	**Vitotronic 200 KW6B Series** **outdoor reset boiler and heating system control** To control one heating circuit without mixing valve, and two heating circuits with mixing valves. • digital outdoor reset boiler and heating system control • with digital tracking of day and week • with independently programmable timer periods, heating curves, temperature setpoints and operating programs • with DHW production management (sensor included) • with integrated LON Communication Module • with integrated diagnostic system and additional functions • outdoor temperature sensor included in accessory pack with the DHW sensor **Viessmann Mixing Valve Extension Kit** For **each** heating circuit with a Viessmann mixing valve, **one** Mixing Valve Extension Kit is required: ZK01105 List Price **1,192.–** *Maximum 2 Mixing Valve Extension Kits per Vitotronic 200, KW6B (single-boiler application)*	CU3A350	CU3A351	CU3A352	CU3A353	Order No.
Input		19 - 94 5.6 - 27.5	25 - 125 7.3 - 36.6	43 - 160 12.6 - 47	43 - 199 12.6 - 58	MBH kW
Output		17.7 - 87 5.2 - 25.5	23.3 - 116 6.8 - 34	40 - 149 11.7 - 43.7	40 - 185 11.7 - 54.2	MBH kW
List Price		**8,554.–**	**9,034.–**	**10,434.–**	**11,154.–**	**USD**

Technical Data

A.F.U.E.		95.0	95.0	95.0	95.0	%
Dimensions Length		27 684	27 684	31½ 801	31½ 801	inches mm
Width		26 660	26 660	26 660	26 660	inches mm
Height (control closed)		61½ 1562	61½ 1562	61½ 1562	61½ 1562	inches mm
Boiler Vent Connection		80	80	110	110	mm
Combustion Air Connection		80	80	80	80	mm
Shipping Weight (incl. fittings) not including vent system		269 122	275 125	352 160	352 160	lbs kg

[1] *Altitude de-rations: CU3A 94 to 199 altitude: 10 000 ftde-ration: 18%*

- *Boiler standard working pressure: 30 psig.*
- *Boiler is suitable for operation with a balanced flue. Please use a certified Category IV vent system of PP(s) or stainless steel or CPVC.*
- *Engineered seismic bracket kits, which comply with local seismic requirements, are available from Viessmann.*
- *For Vitocrossal 300 CU3A Series, order 7557 079,* ***List Price 1,030.–.***

Standard Equipment:
Floor-standing boiler, Vitotronic 200 KW6B, and installation fittings.

Vitocrossal 300	2	3	4	No. of Boilers
Multiple Boiler Packages				
Vitocrossal 300	Pkg 1	Pkg 2	Pkg 3	Pkg No.
CU3A 94	CU3A468	CU3A469	CU3A470	Order No.
Total Input	188	282	376	MBH
Total Output	174	261	348	MBH
Total Package List Price	**21,079.–**	**29,720.–**	**38,361.–**	**USD**
Vitocrossal 300	Pkg 4	Pkg 5	Pkg 6	Pkg No.
CU3A 125	CU3A471	CU3A472	CU3A473	Order No.
Total Input	250	375	500	MBH
Total Output	232	348	464	MBH
Total Package List Price	**22,039.–**	**31,160.–**	**40,281.–**	**USD**
Vitocrossal 300	Pkg 6	Pkg 7	Pkg 8	Pkg No.
CU3A 160	CU3A474	CU3A475	CU3A476	Order No.
Total Input	320	480	640	MBH
Total Output	298	447	596	MBH
Total Package List Price	**24,839.–**	**35,360.–**	**45,881.–**	**USD**
Vitocrossal 300	Pkg 9	Pkg 10	Pkg 11	Pkg No.
CU3A 199	CU3A477	CU3A478	CU3A479	Order No.
Total Input	398	597	796	MBH
Total Output	370	555	740	MBH
Total Package List Price	**26,279.–**	**37,520.–**	**48,761.–**	**USD**

Package Standard Equipment:
- Vitocrossal 300, MBH capacity as above with standard equipment as listed in previous section
- Vitotronic 300-K, MW2C cascade control and comm. card
- LON cables
- Neutralization tanks

Other Equipment / Options
(**not** included in Package Standard Equipment):
- All venting
- Low-loss header (if required)
- Circulation pumps
- Factory start-up

<-Return to contents

VITOCROSSAL 300

Multiple Boiler Installations
Vitotronic 300-K, MW2C

Wall-Mounted Master Boiler Control

Vitotronic 300-K

Vitotronic 300-K, MW2C Series
wall-mounted, digital indoor/outdoor master boiler and heating system control for up to **8** boilers

- with color touch screen user interface
- with electronic circuit board for the 2nd and 3rd heating circuit with mixing valve
- with domestic hot water production features, including sensor
- including strap-on supply temperature sensor for low-loss header (NTC 10 kOhm)
- capable of communication with Vitotronic 200-H via **LON-BUS** if equipped with LON Communication Module (optional)

7727 574
2,760.–

Order No.
USD

LON Communication Module
electronic circuit board enabling data communication via Viessmann LON system BUS. For installation inside Vitotronic 300-K, MW2C.
7172 174 List Price **600.–**

Viessmann Mixing Valve Motor
For **each** heating circuit with Viessmann mixing valve, **one** mixing valve motor is required:
7509 472 List Price **420.–**
Maximum 2 Mixing Valve Motors per Vitotronic 300-K, MW2C (multiple-boiler application)

Mixing Valve Adaptor, 120V
required for **each** Viessmann mixing valve motor
7134 560 List Price **311.–**

For larger sizes of mixing valves, please refer to Centra mixing valves and mixing valve motor on opposite page.

Accessories

Viessmann Mixing Valves

Mixing Valve Extension Kit consisting of: **Mixing Valve Module** (KM-BUS participant, wall mount) • plugs for circulation pump and mixing valve motor • KM-BUS plug • 120V, 60Hz, 2A in CSA housing, with 6.5' / 2m cord and 120V plug **Mixing Valve Motor**, 120/1/60 • for Viessmann 3- and 4-way mixing valves only • including strap-on supply temperature sensor (NTC 10 kOhm) *Maximum 2 Mixing Valve Extension Kits per Vitotronic 200, KW6B (single-boiler application)*	ZK01105 **1,192.–**	Order No. **USD**
Viessmann Mixing Valve Motor, 120/1/60 • for Viessmann 3- and 4-way mixing valves only • order one mixing valve per low-temperature heating circuit • including strap-on supply temperature sensor (NTC 10 kOhm) *Maximum 2 Mixing Valve Motors per Vitotronic 300-K, MW2C (multiple-boiler application)* [1]	7509 472 **420.–**	Order No. **USD**
Mixing Valve Adaptor, 120V required for **each** Viessmann mixing valve motor • 120/1/60	7134 560 **311.–**	Order No. **USD**

Viessmann 3-Way Mixing Valves	¾″ 7134 742 **518.–**	1″ 7134 743 **550.–**	1¼″ 7134 744 **621.–**	1½″ 7134 745 **694.–**	2″ 7134 746 **818.–**		Dia Order No. **USD**

Centra Mixing Valves

Centra Mixing Valve Motor, 24/1/60 • for Centra 3 • order one mixing valve per low-temperature heating circuit • including strap-on supply temperature sensor (NTC 10 kOhm) *Maximum 2 Mixing Valve Motors per Vitotronic 300-K, MW2C (multiple-boiler application)* [1]	9544 483 **887.–**	Order No. **USD**
Mixing Valve Adaptor, 24V required for **each** Centra mixing valve motor Ĥ 24/1/60	7134 559 **396.–**	Order No. **USD**

Centra 3-Way Mixing Valves [2] • including flange set • including strap-on supply temperature sensor (NTC 10 kOhm)	2½″ ZK01151 **1,505.–**	3″ ZK01152 **2,078.–**	4″ ZK01153 **2,574.–**	5″ ZK01154 **3,878.–**	6″ ZK01155 **5,395.–**		Dia Order No. **USD**

[1] *Maximum 2 Mixing Valve Motors in any combination of 120/1/60 or 24/1/60.*

[2] *Each mixing valve package includes 1 x 7832 365 Viessmann strap-on supply sensor #2. If mixing valves are field supplied (or already installed in a preexisting application), please order 1 x 7832 365 for each mixing valve.* ***List Price 258.–***

<-Return to contents

Accessories

Expanded Functions

Extension Module AM1 wall-mounted extension module controls up to 2 of the following circ. pumps: • DHW recirculation pump • DHW production pump • heating circuit pump for the circuit without a mixing valve *Maximum 1 Extension Module AM1 per boiler.* *For single-boiler applications only (**not** for use with Vitotronic 300-K, MW2C).*	7533 425 **615.–**	Order No. **USD**
Extension Module EA1 wall-mounted extension module whose inputs and outputs enable up to 5 additional functions:. • boiler setpoint temperature **1 Analog input (0 - 10 V).** • boiler setpoint temperature **3 Digital inputs.** • external operating status change of heating circuits 1 to 3 • external deactivation • external deactivation with compiled fault indication • external request for a minimum boiler water temperature • fault notification • brief operation of DHW recirculation pump **1 Output contact (potential-free)** • compiled fault indication • control of a DHW recirculation pump *Maximum 1 Extension Module EA1 per Vitotronic 300-K, MW2C (multiple-boiler application)*	7533 426 **637.–**	Order No. **USD**

Sensors

Room Temperature Sensor (wall mount, NTC 10 kOhm) for use with Vitotrol 300-A *Order Room Temperature Sensor if Vitotrol 300-A cannot be installed in a centralized location to measure room temperature.*	7438 537 **206.–**	Order No. **USD**
LLH Temperature Sensor (Immersion, NTC) to measure the temperature inside a low-loss header *Standard equipment of Vitotronic 300-K, MW2C (multiple-boiler application)*	7179 488 **227.–**	Order No. **USD**

Remote Controls

Vitotrol 200-A [1] (KM-BUS protocol) User interface to operate one heating circuit: • daytime temperature and operating program • with party and energy-saving button • display indication of outside temperature, room temperature and operational settings • with room temperature sensor for room-dependent activation (for heating circuit with mixing valve only)	7438 363 **314.–**	Order No. **USD**
Vitotrol 300-A [1] (KM-BUS protocol) User interface to operate one, two or three heating circuits: • daytime temperature, set-back temperature, DHW temperature, operating and holiday program, as well as party and energy-saving function • timer program for heating circuits, DHW production, and DHW recirculation pump • illuminated graphic display to show outdoor temperature, room temperature, operational settings together with descriptive texts • with room temperature sensor for room-dependent activation (for heating circuit with mixing valve only)	7571 231 **529.–**	Order No. **USD**

[1] *If the Vitotrol is to operate based upon room-dependent activation, ensure placement in a centralized location.*
For Vitotrol 300-A only, order Room Temperature Sensor 7438537 if it cannot be installed in a centralized location.

Accessories

Other

KM-BUS Expansion Module to connect between 2 and 9 additional devices to the KM-BUS	7133 393 **201.–**	Order No. **USD**

Solar DHW Production and Supplemental Heating

Solar Module SM1 wall-mounted extension module with electronic differential control for dual-coil DHW production and to supplement space heating using solar collectors when used with oil/gas-fired heating boilers.	7533 427 **859.–**	Order No. **USD**
Order immersion sensor 7438 702 if the following features are required: • for circulation management in systems with 2 storage tanks • for return flow management between boiler and hot water buffer tank • to supply heat to additional accessories	7438 702 **201.–**	Order No. **USD**

Communication

LON Communication Module [2] electronic circuit board enabling data communication via Viessmann LON system BUS. For installation inside Vitocrossal 300, CU3A.	Standard Equipm.	Order No. **USD**
LON Communication Module electronic circuit board enabling data communication via Viessmann LON system BUS. For installation inside Vitotronic 300-K, MW2C.	7172 174 **600.–**	Order No. **USD**
LON Connecting Cable, 23ft / 7m for data exchange between controls	7143 495 **87.–**	Order No. **USD**
LON Extension Jack to extend LON Connecting Cable	7143 496 **84.–**	Order No. **USD**
LON Terminal Resistor (2 Pieces) [2] to terminate the system BUS, a resistor must be installed on each free end	Standard Equipm.	Order No. **USD**

[2] *This component is standard equipment of each Vitocrossal 300, CU3A.*

<-Return to contents

VITOCROSSAL 300

Coaxial PP(s) Vent System

Vent System [1]	Vent System Diameter			80/125	110/160	Diameter
Horizontally Vented	Maximum Equivalent Length (EqL)		**CU3A**	**94/125** 98 / 30	**94/125** 108 / 33	ft. / m
			CU3A		**160/199** 98 / 30	ft. / m
Room Air Independent Operation **Important!** As a starting point, please pay attention to boiler vent connection size shown on page 2.4-64.	① **Coaxial Adaptor** 2-pipe to coaxial	80-80 to 80/125		7664 165 **213.–**		Order No. **USD**
		110-80 to 110/160			7664 166 **228.–**	Order No. **USD**
	Coaxial Increaser 80/125 to 110/160 not shown - only for CU3A 94/125			**—**	7664 163 **172.–**	Order No. **USD**
	② **90° Elbow** EqL = 1.6ft. / 0.5m			7664 144 **80.–**	7664 145 **118.–**	Order No. **USD**
	③ **Straight Pipe** [2] 3.3ft. / 1m			7664 141 **69.–**	7664 142 **113.–**	Order No. **USD**
	④ **Horizontal Vent Terminal** 2.6ft. / 0.8m			7664 150 **120.–**	7664 151 **207.–**	Order No. **USD**
	⑤ **Protective Screen** [1]			7725 656 **141.–**		Order No. **USD**
	⑥ **Mounting Clip** [2] (each)			7664 159 **18.–**	7664 160 **23.–**	Order No. **USD**
	Other Available Vent Pieces not shown in illustration to the left					
	Straight Pipe [2] 1.6ft. / 0.5m			7664 138 **47.–**	7664 139 **88.–**	Order No. **USD**
	45° Elbow (Set of 2) EqL = 1.0ft. / 0.3m			7664 147 **86.–**	7664 148 **172.–**	Order No. **USD**

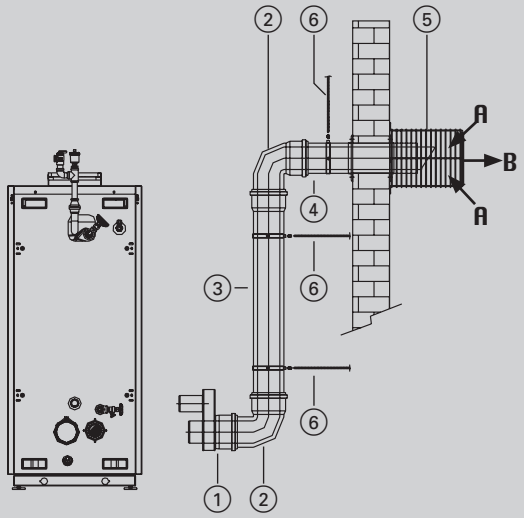

A Combustion Air Intake
B Flue Gas Outlet

[1] *PP(s) coaxial vent material **must** be ULC S-636 certified for Category IV boilers. Do **not** mix non-ULC S-636 with ULC S-636 venting. Side wall venting installation **must** include Viessmann Protective Screen!*

[2] *Order **1** Mounting Clip for **each** straight length of vent pipe installed.*

► *Always follow the installation instructions of the vent manufacturer and of Viessmann.*

Vent System [1]	Vent System Diameter			80/125	110/160	Diameter
Vertically Vented	Maximum Equivalent Length (EqL)		**CU3A**	**94/125** 98 / 30	**94/125** 108 / 33	ft. / m
			CU3A		**160/199** 98 / 30	ft. / m
Room Air Independent Operation **Important!** As a starting point, please pay attention to boiler vent connection size shown on page 2.4-64.	① **Coaxial Adaptor** 2-pipe to coaxial	80-80 to 80/125 110-80 to 110/160		7664 165 **213.–**	 7664 166 **228.–**	Order No. **USD** Order No. **USD**
	Coaxial Increaser 80/125 to 110/160 not shown - only for CU3A 94/125			**—**	7664 163 **172.–**	Order No. **USD**
	② **90° Elbow** EqL = 1.6ft. / 0.5m			7664 144 **80.–**	7664 145 **118.–**	Order No. **USD**
	⑥ **Mounting Clip** [2] (each)			7664 159 **18.–**	7664 160 **23.–**	Order No. **USD**
	⑨ **Straight Pipe** [2] 1.6ft. / 0.5m **Straight Pipe** [2] 3.3ft. / 1m			7664 138 **47.–** ***or*** 7664 141 **69.–**	7664 139 **88.–** ***or*** 7664 142 **113.–**	Order No. **USD** Order No. **USD**
	⑩ **45° Elbow** (Set of 2) EqL = 1.0ft. / 0.3m			7664 147 **86.–**	7664 148 **172.–**	Order No. **USD**
	⑪ **Vertical Vent Terminal** 3.9ft. / 1.2m			7664 153 **140.–**	7718 977 **335.–**	Order No. **USD**
	⑫ **Roof Flashing and Storm Collar** (B-Vent material or better)			field supplied		

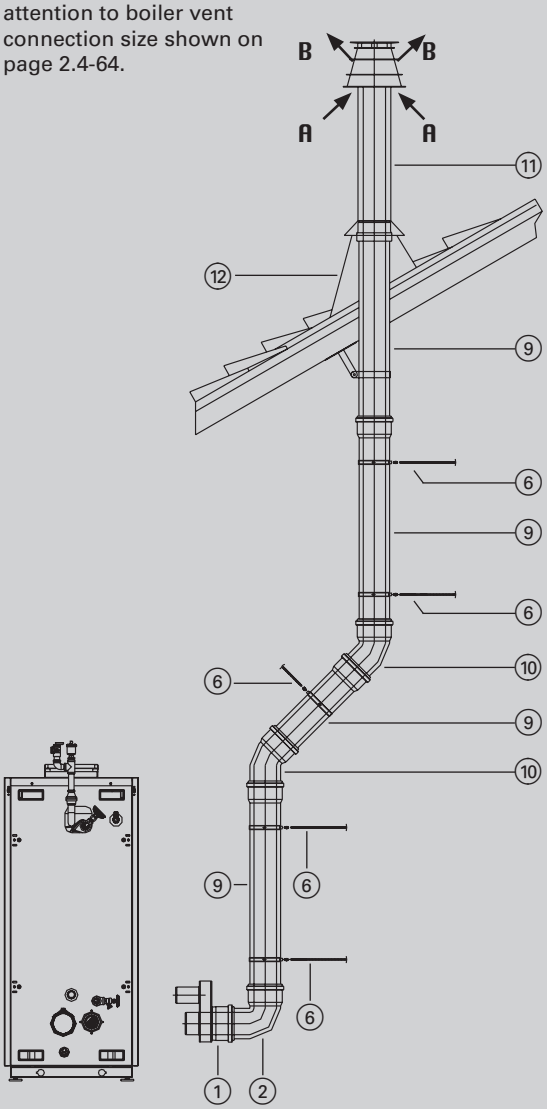

A Combustion Air Intake
B Flue Gas Outlet

[1] *PP(s) coaxial vent material **must** be ULC S-636 certified for Category IV boilers. Do **not** mix non-ULC S-636 with ULC S-636 venting.*
[2] *Order **1** Mounting Clip for **each** straight length of vent pipe installed.*
► *Always follow the installation instructions of the vent manufacturer and of Viessmann.*

<-Return to contents

VITOCROSSAL 300

Alternative Vent Systems

Vent Systems	Air Intake Diameter	Flue Outlet Diameter	Maximum Equivalent Length	
Vitocrossal 300, CU3A 94/125	*Air Intake adapter included in CU3A, Flue Outlet adapter must be ordered*	*Flue Outlet adapter must be ordered*		
Coaxial Venting [1 5 6]	80/125 System		99 / 30	Ft / m
Rigid PP(s) Venting [1 4 7]	3 inches / 80 mm	3 inches / 80 mm	198 / 60	Ft / m
Flexible PP(s) Venting [1 4 7]	3 inches / 80 mm	3 inches / 80 mm	149 / 45	Ft / m
CPVC Venting [2 7]	3 inches / 80 mm	3 inches / 80 mm	198 / 60	Ft / m
Stainless Steel Venting [3 7]	3 inches / 80 mm	3 inches / 80 mm	198 / 60	Ft / m
Vitocrossal 300, CU3A 160/199				
Coaxial Venting [1 5 6]	100/150 or 110/160 System		99 / 30	Ft / m
Rigid PP(s) Venting [1 4 7]	3 inches / 80 mm	4 inches / 110 mm	198 / 60	Ft / m
Flexible PP(s) Venting [1 4 7]	3 inches / 80 mm	4 inches / 110 mm	149 / 45	Ft / m
CPVC Venting [2 7]	3 inches / 80 mm	4 inches / 110 mm	198 / 60	Ft / m
Stainless Steel Venting [3 7]	3 inches / 80 mm	4 inches / 110 mm	198 / 60	Ft / m

[1] *Coaxial and PP(s) vent material **must** be ULC S-636 certified for Category IV boilers: Centrotherm, Cox Geelen, or M&G Duravent.*
[2] *CPVC vent material **must** be ULC/UL listed for Category IV boilers. Suggested source: IPEX Inc.*
*For Vitocrossal 300, CU3A 94/125, order 80 mm to 3" CPVC Flue Adaptor 7134 770, **List Price 34.–**.*
*For Vitocrossal 300, CU3A 160/199, order 110 mm to 4" CPVC Flue Adaptor 7134 771, **List Price 48.–**.*
[3] *Stainless steel vent material **must** be ULC/UL listed for Category IV boilers.*
Combustion air supply pipe may be made of the following materials: PP(s), ABS, CPVC, or PVC.
[5] *Requires coaxial boiler adaptor.*
For Cox Geelen, see previous pages.
For M&G Duravent, order as follows:
*- Vitocrossal 300, CU3A 94/125, order Coaxial Adaptor 80-80 to 100/125 7664 165, **List Price 213.–**.*
*- Vitocrossal 300, CU3A 160/199, order Coaxial Adaptor 80-110 to 100/150 7664 166, **List Price 228.–**.*
For others, please contact vent manufacturer.
[6] *Side wall venting installation **must** include Viessmann Protective Screen 7725 656, **List Price 141.–**.*
[7] *Up to 4 x Vitocrossal 300, CU3A Series boilers of the same size may be common vented:*
*- for 2 boilers, order Common Venting Kit 7722 730, **List Price 160.–**.*
*- for 3 boilers, order Common Venting Kit 7722 731, **List Price 238.–**.*
*- for 4 boilers, order Common Venting Kit 7722 732, **List Price 319.–**.*

▶ *Always follow the installation instructions of the vent manufacturer and of Viessmann's CU3A common vent installation instructions (5840 759).*

Vitocell 100-V
Up to 53 USG / 200 ltr capacity

Vitocell 100-V
Up to 66 USG / 250 ltr capacity

Vitocell 100-V
Up to 73 USG / 300 ltr capacity

Vitocell 100-V

Indirect-fired domestic hot water storage tank

The CVWC tanks may be used in conjunction with boilers. The MSCA buffer tanks are only for use with the Vitocal 100-AW heat pumps.

- Modular indirect hot water tank concept ideal for heat pumps and boilers
- System solution with heating water buffer tank, allows easy installation with 360° rotation
- Supply DHW all day long with large heat exchanger surfaces
- Wear-free, integrated impressed current anode protects against corrosion
- Uniform design of tank and Vitocal 100-AW Indoor Unit
- Modest space requirement 6 ft2 (0.5 m2)

®This trademark is registered with the U.S. Patent and Trademark Office.

<-Return to contents

VITOCELL 100-V

Indirect-fired domestic hot water storage tank
53 to 79 USG / 200 to 300 ltr

Indirect Storage Tanks **Steel construction, with enamel finish.**	Vitocell 100-V 53 (200L)	Vitocell 100-V 66 (250L)	Vitocell 100-V 79 (300L)	Model No.
DHW tank to heat water for domestic use in combination with Vitocal 100-AW Air-to-Water Heat Pump or Viessmann Boilers. 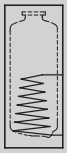	7994 958 **1,610.–**	7994 959 **1,740.–**	7994 960 **1,880.–**	Order No. **USD**
Technical Data				
Capacity	53 200	66 250	79 300	USG ltr
Dimensions				
Length	26-¼ 688	26-¼ 688	26-¼ 688	inches mm
Width	28-¼ 714	28-¼ 714	28-¼ 714	inches mm
Height	48-½ 1229	56-½ 1430	67 1697	inches mm
Weight	214 97	245 111	278 126	lbs kg
Insulation	PUR Foam			

Steel DHW tank with Ceraprotect™ enamel coating.

- Integral welded sensor well for tank temperature sensor/temperature controller
- Temperature and pressure relief valve
- Installation fittings
- Technical literature set
- Adjustable feet
- Fitted thermal insulation
- Color of the epoxy-coated sheet steel casing: Vitopearlwhite.

For information regarding other Viessmann System Technology componentry, please reference documentation of the respective product.

Indirect-fired domestic hot water storage tank
92 to 119 USG / 350 to 450 ltr

Vitocell 300-H ®

EHA Series

Indirect-fired domestic hot water storage tank
of **high grade stainless steel**

- Corrosion-resistant tank of **high-grade stainless steel** offers a long service life.
- Completely **hygienic** and lightweight.
- **Heat exchanger coil extends to the tank bottom** to heat the complete tank volume, no cool zones - hygienic.
- **Extremely reliable domestic hot water supply** assured through fast, uniform heating via generously sized heat exchanger surfaces.
- **Standby losses minimized** by 2¼", highly effective, foamed-in-place, HCFC-free insulation.
- Approved by the State of Massachusetts as ASME Equivalent.

®This trademark is registered with the U.S. Patent and Trademark Office.

<-Return to contents

VITOCELL 300-H

Vitocell 300-H stainless steel	EHA-53	EHA-92	EHA-119	Model No.
DHW tank to heat water for domestic use in combination with a hot water heating boiler [1]				
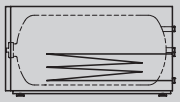 EHA Series	Z014848 **5,097.–**	Z014849 **6,786.–**	Z014850 **8,325.–**	Order No. **USD**
Stackable		max. 2	max. 3	

Technical Data					
Capacity		53 200	92 350	119 450	USG ltr
Dimensions					
	Length	48 3/4 1236	62 1/2 1590	65 1654	inches mm
	Width	25 1/4 640	32 3/4 830	35 3/4 910	inches mm
	Height	25 3/4 654	31 786	35 886	inches mm
Weight		184 84	379 172	421 191	lbs kg
Insulation		PUR Foam	PUR Foam		

[1] *Some Vitocell 300-H tanks can be installed as a tank battery.*
Two 92 USG / 350 Ltr. tanks or three 119 USG / 450 Ltr. tanks may be stacked.

[2] *Vitotronic 200 and Vitotronic 300 boiler controls include a Power/Pump Module as standard equipment;*
*other controls/boilers do **not** — please order accordingly. The Power/Pump Module will power the pump for the heat exchanger coil.*
DHW Pump Modules only operate with DHW production priority over space heating.

▶ *DHW tank standard working pressure: 150 psig.*

Standard Equipment:
DHW tank with preinstalled insulation, NPT connections and installation fittings c/w temperature and 150 psig pressure relief valve.

Important!
For multiple tank applications, please see Technical Data Manual.

Vitocell 300-V
Up to 42 USG / 160 ltr capacity
Vitopearlwhite

Vitocell 300-V
up to 79 USG / 300 ltr capacity
Vitopearlwhite

Vitocell 300-V
119 USG / 450 ltr capacity

Vitocell 300 ®

EVIB Series
EVBB Series

Indirect-fired domestic hot water storage tank of high grade stainless steel

- Corrosion-resistant tank of high-grade stainless steel offers a long service life.
- Fully hygienic due to high quality homogeneous stainless steel surfaces.
- The high-alloy material is immune to cracking or peeling. The tank stays hygienic and requires only minimum service.
- Does not require a consumable anode for corrosion protection.
- The entire water content is heated by a $1^{3}/_{8}$" / 35 mm diameter stainless steel heat exchanger surface which extends to the bottom of the tank.
- The positioning of the tubular heat exchanger coil further ensures that 82 to 97% of the tank volume can be drawn at constant water temperature.
- The stainless steel heat exchanger coil is self-venting towards the top and self-draining towards the bottom, therefore not susceptible to reduced heat transfer due to air lock or deposits.
- Easy transport into mechanical room due to low weight and compact construction.

®This trademark is registered with the U.S. Patent and Trademark Office.

<-Return to contents

VITOCELL 300-V VITOCELL 300-B

Vitocell 300 stainless steel	EVIB-42	EVIB-53	EVIB-79	EVIB-119		EVBB-79	EVBB-119	Model No.
DHW tank to heat water for domestic use in combination with a hot water heating boiler								
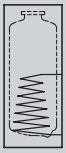	7970 735 **2,163.–**	7970 736 **3,373.–**	7970 737 **3,690.–**	ZK06893 **5,720.–**	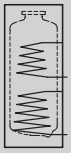	7970 738 **5,966.–**	ZK06894 **7,420.–**	Order No. **USD**
Brass Elbow with sensor well for tank temperature sensor (for solar applications only)	7606 041 **189.–**	7606 041 **189.–**		7606 041 **189.–**		7606 041 **189.–**	7606 041 **189.–**	Order No. **USD**
DHW Production Controller for: Ĥ Vitorond 100 VR1 Series (HydroLevel control only) *Order **one** DHW Production Controller per boiler/tank combination*	7639 692 **398.–**					7639 692 **398.–**		Order No. **USD**
Thermometer		- wall mounted - digital scale in °C and °F					7725 731 **117.–**	
Carrying support		To aid in handling 119 gal (450 L) vertical tanks					7538 708 **574.–**	

2.3

Technical Data

Capacity	42 160	53 200	79 300	119 450		79 300	119 450	USG ltr
Dimensions								
Length	25 634	25 634	26¼ 668	32¾ 831		26¼ 668	32¾ 831	inches mm
Width	26 661	26 661	28 706	35½ 904		28 706	35½ 904	inches mm
Height	47 1190	55½ 1410	68½ 1740	77 1960		68½ 1740	77 1960	inches mm
Weight	126 57	143 65	231 105	226 103		249 113	259 118	lbs kg
Insulation	PUR Foam	PUR Foam		Wrap- around		PUR Foam	Wrap- around	

[1] *Vitotronic 200 and Vitotronic 300 boiler controls include a Power/Pump Module as standard equipment; other controls/boilers do **not** — please order accordingly. The Power/Pump Module will power the pump for the heat exchanger coil. DHW Pump Modules only operate with DHW production priority over space heating.*

- *Engineered seismic bracket kits, which comply with local seismic requirements, are available from Viessmann. For Vitocell 300-V EVIB Series and EVBB Series (119 USG / 450 ltr size only). order 7134 603, **List Price 1,630.–**.*
- *DHW tank standard working pressure: 150 psig.*

Important!
For multiple tank applications, please see Technical Data Manual.

Standard Equipment:
DHW tank (insulation preinstalled up to size 79 USG / 300 ltr) with NPT connections and installation fittings c/w temperature and 150 psig pressure relief valve.

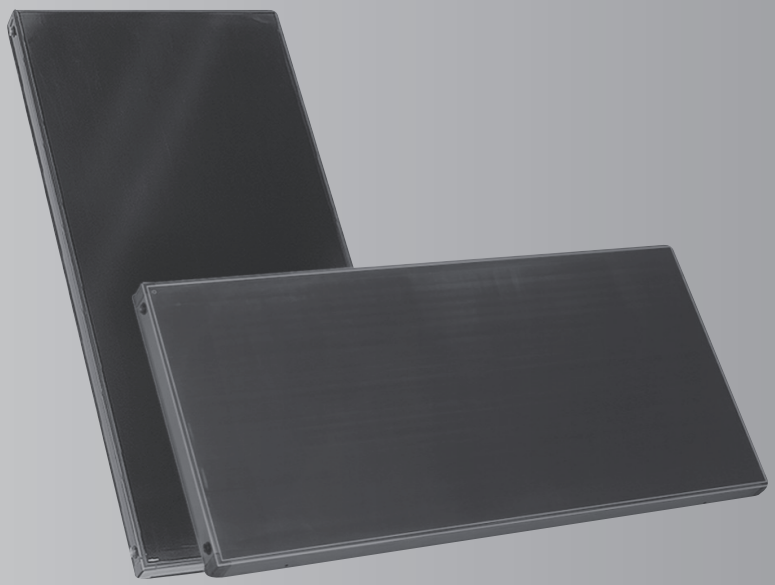

Vitosol 200-FM

Flat Plate Solar Collectors
SV2F and SH2F Series

Ideal for domestic hot water (DHW) or pool heating applications or as an economical option for combination DHW/space heating systems.

- For vertical or horizontal installation
- For sloped-roof installation.
- For flat-roof and free-standing installation
- For facade installation, SH2F Series only

- Powerful flat-plate collectors for rooftop and flat roof installation with automatic temperature limiting via ThermProtect, a steam-free and intrinsically safe solar installation.
- ThermProtect switching absorber limits the stagnation temperature to 145°C / 293°F.
- Fabricated with integrated coils and manifold system. Up to 12 collectors can be operated in parallel
- Attractive collector design with dark blue frame.
- The absorber with specialty coating, the stable and highly transparent cover made from special glass, and the highly effective thermal insulation ensure high solar yields.
- Permanently sealed and high stability via peripheral aluminum frame enclosure.
- Puncture-proof and corrosion-resistant back panel.
- Uniform Viessmann rack system for all Viessmann collectors.
- Quick and reliable collector connection via flexible stainless steel corrugated pipe connectors.

<-Return to contents

VITOSOL 200-FM

Flat Plate Solar Collectors - **vertical** orientation

Solar System

Vitosol 200-FM **SV2F Series** Flat plate solar collector (1 piece) with dark blue frame	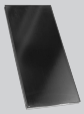	7571 217 **1,690.–**	Order No. **USD**

Solar System	**Collector Area**								
	24.8 2.3	**49.5 4.6**	**74.3 6.9**	**99.0 9.2**	**123.8 11.5**	**145.3 13.5**	**198.1 18.4**	**247.6 23.0**	**ft² m²**
Vitosol 200-FM	1x	2x	3x	4x	5x	6x	8x	10x	Qty
SV2F Series	7571 217								Order No.
	1,690.–	**3,380.–**	**5,070.–**	**6,760.–**	**8,450.–**	**10,140.–**	**13,520.–**	**16,900.–**	**USD**
Interconnection Pipes (1 pair)		1x	2x	3x	4x	5x	7x	9x	Qty
	7248 239								Order No.
		99.–	**198.–**	**297.–**	**396.–**	**495.–**	**594.–**	**891.–**	**USD**
General Connection Set for a field of up to 12 collectors (one **required** per collector array)	7248 240 **185.–**								Order No. **USD**
Sensor Well Set (one **required** per collector array)	7174 993 **99.–**								Order No. **USD**
Installation Fittings Set [1] to adapt from metric to ¾" pipe (one **required** per solar system)	ZK02868 **121.–**								Order No. **USD**

Technical Data Single Collector

Collector Dimensions (width x height x depth)	41¾ x 93¾ x 3 ½ 1056 x 2380 x 90	inches mm
Weight	90.2 / 40.9	lbs / kg

[1] *Installation fittings set includes all installation manuals and an adaptor fitting for expansion tank.*
[2] *Substructure material (to which mounting rack attaches) must be field supplied.*

Mounting Accessories	**Required hardware with corresponding collector count**								
	1	**2**	**3**	**4**	**5**	**6**	**8**	**10**	
Mounting Hardware for sloped, shingled roofs	Z003 097 **346.7**	Z003 098 **573.6**	Z003 099 **823.4**	Z003 100 **1,070.3**	Z003 101 **1,331.9**	Z003 102 **1,567.–**	Z003 103 **2,075.5**	Z003 104 **2,572.2**	Order No. **USD.**
Mounting Rack c/w Hardware [2] for a free-standing, flat roof installation, mounted to substructure. Collector angle: 25 - 60°	Z003 145 **758.–**	Z003 146 **1,516.–**	Z003 147 **2,274.–**	Z003 148 **3,032.–**	Z003 149 **3,790.–**	Z003 150 **4,548.–**	Z003 151 **6,146.–**	Z003 152 **7,662.–**	Order No. **USD**

3.1

Solar System

Vitosol 200-FM **SH2F Series** Flat plate solar collector (1 piece) with dark blue frame	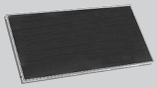	7561 684 **1,630.–**	Order No. **USD**

Solar System	**Collector Area**								
	24.8 2.3	**49.5 4.6**	**74.3 6.9**	**99.0 9.2**	**123.8 11.5**	**145.3 13.5**	**198.1 18.4**	**247.6 23.0**	**ft² m²**
Vitosol 200-FM	1x	2x	3x	4x	5x	6x	8x	10x	Qty
SH2F Series	7561 684								Order No.
	1,630.–	**3,260.–**	**4,890.–**	**6,520.–**	**8,150.–**	**9,780.–**	**13,040.–**	**16,300.–**	**USD**
Interconnection Pipes (1 pair)		1x	2x	3x	4x	5x	7x	9x	Qty
		7248 239							Order No.
		99.–	**198.–**	**297.–**	**396.–**	**495.–**	**693.–**	**891.–**	**USD**
General Connection Set for a field of up to 12 collectors (one **required** per collector array)	7248 240 **185.–**								Order No. **USD**
Sensor Well Set (one **required** per collector array)	7174 993 **99.–**								Order No. **USD**
Installation Fittings Set [1] to adapt from metric to ¾" pipe (one **required** per solar system)	ZK02868 **121.–**								Order No. **USD**

Technical Data Single Collector

Collector Dimensions (width x height x depth)	93¾ x 41¾ x 3 ½ 2380 x 1056 x 90	inches mm
Weight	90.2 / 40.9	lbs / kg

[1] *Installation fittings set includes all installation manuals and an adaptor fitting for expansion tank.*
[2] *Substructure material (to which mounting rack attaches) must be field supplied.*

Mounting Accessories	**Required hardware with corresponding collector count**								
	1	**2**	**3**	**4**	**5**	**6**	**8**	**10**	
Mounting Hardware for sloped, shingled roofs	Z003169 **453.7**	Z003170 **847.6**	Z003171 **1,224.4**	Z003172 **1,618.3**	Z003173 **2,006.9**	Z003174 **2,389.–**	Z003175 **3,171.5**	Z003176 **3,942.2**	Order No. **USD**
Mounting Rack c/w Hardware [2] for a free-standing, flat roof installation, mounted to substructure. Collector angle: 25 - 45°	Z003225 **519.–**	Z003226 **1,038.–**	Z003227 **1,557.–**	Z003228 **2,076.–**	Z003229 **2,595.–**	Z003230 **3,114.–**	Z003231 **4,234.–**	Z003232 **5,272.–**	Order No. **USD**
Mounting Rack c/w Hardware [2] for a free-standing, flat roof installation, mounted to substructure. Collector angle: 50 - 80°	Z005467 **564.–**	Z005468 **1,143.–**	Z005469 **1,722.–**	Z005470 **2,301.–**	Z005471 **2,880.–**	Z005472 **3,459.–**	Z005473 **4,684.–**	Z005474 **5,842.–**	Order No. **USD**
Mounting Rack c/w Hardware [2] for vertical (wall) installation Angle from wall: 10-45°	Z005475 **532.–**	Z005476 **1,146.–**	Z005477 **1,760.–**	Z005478 **2,374.–**	Z005479 **2,988.–**	Z005480 **3,602.–**	Z005481 **4,830.–**	Z005482 **6,058.–**	Order No. **USD**

<-Return to contents

VITOSOL 200-FM

Flat Plate Solar Collectors

Spare Parts for Installation

Spare Parts Set assortment of spare parts which may get lost during installation.	7317 071 **41.–**	Order No. **USD**

Flexible Insulated Piping Systems

Solar Supply/Return Piping Kit, 50' / 15m • set of 2 flexible stainless steel pipes, ½" nominal diameter • set of 4 compression fittings, 22mm Ø • set of 4 copper connectors 2½" x 22mm Ø • set of 4 pipe supports including attachment hardware • with weather proof, high temperature insulation • with sensor wire • with one roll of weather proof tape	7511 569 **1,410.–**	Order No. **USD**
Solar Supply/Return Piping Kit, 40' / 12m • set of 2 flexible stainless steel pipes, ½" nominal diameter • set of 4 compression fittings, 22mm Ø • set of 4 copper connectors 2½" x 22mm Ø • set of 4 pipe supports including attachment hardware • with weather proof, high temperature insulation • with sensor wire • with one roll of weather proof tape	7511 568 **1,240.–**	Order No. **USD**
Solar Supply/Return Piping Kit, 20' / 6m • set of 2 flexible stainless steel pipes, ½" nominal diameter • set of 4 compression fittings, 22mm Ø • set of 4 copper connectors 2½" x 22mm Ø • set of 4 pipe supports including attachment hardware • with weather proof, high temperature insulation • with sensor wire • with one roll of weather proof tape	7511 567 **741.–**	Order No. **USD**
Splice Fittings, 22mm Ø (1 pair) • to connect two pieces of solar supply/return piping together	7817 370 **84.–**	Order No. **USD**
Compression Fittings, 22mm Ø (1 pair) • to connect solar supply/return piping to the copper components of the solar system **The following fittings plug into each compression fitting, and must be ordered separately depending upon the type of component connections to be made:** **Copper Adaptor** • to connect solar supply/return piping to ¾" Ø copper pipe, order 2 x copper adaptors (see below) **Copper Connector** • to connect solar supply/return piping to Vitosol collector fittings, air vents and sensor wells, order 2 x copper connectors (see below)	7817 369 **84.–**	Order No. **USD**
Copper Adaptor (each) • length: 4", to adapt from 22mm Ø to ¾" Ø pipe	9543 380 **24.–**	Order No. **USD**
Copper Connector (each) • length: 2½", to interconnect 22mm Ø componentry	5276 590 **11.3**	Order No. **USD**
Sensor Well, nickel plated copper construction ⑤ ½" NPT thread ⑤ 1.77" / 45mm length ⑤ accepts Ø 7mm solar sensors	7773 252 **43.–**	Order No. **USD**

3.2

Solar System Controls

Solar Control Unit DeltaSol SL
Electronic differential temperature control for multi-load systems:

- large illuminated digital display (in oF or oC) with user-friendly menu operation
- capable of managing east/west collector fields and up to 2 storage tanks
- 3 semiconductor control relay outputs, 1 potential free extra low voltage relay (30v) 5 sensor inputs(pt1000/ pt500), 2 PWM outputs for speed control of High Efficiency pumps, 27 system configurations, 2 x Grundfos Direct Sensor inputs.
- freely adjustable Delta-T function and heat dump function
- data logging onto internal SD card (not included)
- communicates via VBus with optional equipment or for remote access (VBus.net)
- dimensions: W 4.3 x H 6.5 x D 1.8”

Standard Equipment: Solar control unit DeltaSol SL with 2 collector sensor, 2 immersion sensors and installation kit.

Optional Equipment:

Strap-on sensor	7511 934	List Price	**112.–**
Immersion sensor	7416 054	List Price	**102.–**

7272 329
528.–

Order No.
USD

Solar control DeltaSol BX
Electronic differential temperature control for multi-load systems:

- large illuminated digital display (in °F or °C) with user-friendly menu operation
- Capable of managing east/west collector fields and up to 2 storage tanks
- 4 control relay outputs, 5 sensor inputs, 2 PWM outputs for speed control of High Efficiency pumps, 26 system configurations
- freely adjustable Delta-T function and heat dump function
- data logging onto internal SD card (card included)
- communication via VBus with optional equipment (below)
- optional V40 Flowmeter Kit can be connected for energy metering

Standard Equipment: Solar Control Unit Deltasol BX with 2 collector sensors and 3 immersion sensors

Optional Equipment:

Strap-on sensor	7511 934	List Price	**112.–**
Immersion sensor	7416 054	List Price	**102.–**

7454 133
509.–

Order No.
USD

<-Return to contents

VITOSOL Storage

System Technology

Vitocell 300 stainless steel	EVIB-53	EVIB-79	EVIB-119		EVBB-79	EVBB-119	Model No.
DHW tank to heat water for domestic use in combination with a hot water heating boiler							
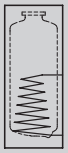	7720 343 **3,290.–**	7720 338 **3,600.–**	ZK06893 **5,720.–**	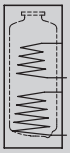	7720 336 **5,820.–**	ZK06894 **7,420.–**	Order No. **USD**
Brass Elbow with sensor well for tank temperature sensor (for solar applications only)	7606 041 **189.–**						Order No. **USD**

Technical Data							
Capacity	53 200	79 300	119 450		79 300	119 450	USG ltr
Dimensions							
Length	22 7/8 581	26¼ 667	32¾ 832		26¼ 667	32¾ 832	inches mm
Width	24 605	29 744	35 888		29 744	35 888	inches mm
Height	57½ 1460	68¼ 1734	77 1960		68¼ 1734	77 1960	inches mm
Weight	154 70	231 105	187 85		249 113	220 100	lbs kg
Insulation	PUR Foam		Wrap-around		PUR Foam	Wrap-around	

[1] *Vitotronic 200 and Vitotronic 300 boiler controls include a Power/Pump Module as standard equipment; other controls/boilers do **not** — please order accordingly. The Power/Pump Module will power the pump for the heat exchanger coil. DHW Pump Modules only operate with DHW production priority over space heating.*

- *Engineered seismic bracket kits, which comply with local seismic requirements, are available from Viessmann. For Vitocell 300-V EVIB Series and EVBB Series (119 USG / 450 ltr size only). order 7134 603, **List Price 1,630.–**.*
- *DHW tank standard working pressure: 150 psig.*

3.2

Standard Equipment:
DHW tank (insulation preinstalled up to size 79 USG / 300 ltr)
with NPT connections and installation fittings
c/w temperature and 150 psig pressure relief valve.

Important!
For multiple tank applications, please see Technical Data Manual.

Installation Accessories

Fast Air Vent [1] • with shut-off valve, brass piping tee and brass compression couplings (Ø 22mm) • for use in high point of collector array	7298 127 **122.–**					Order No. **USD**
Pipe Coupling with Air Bleed [1] ■ with manual key vent and brass compression couplings (Ø 22mm) ■ for use in high point of collector array	7316 263 **41.–**					Order No. **USD**
Brass Elbow with sensor well for installing solar tank temperature sensor **Compatibility** ■ Vitocell 300-V EVIB 53, 79 ■ Vitocell 300-V EVIB 119 ■ Vitocell 300-B EVBB 79 ■ Vitocell 300-B EVBB 119	1″ 7606 041 **189.–**	1¼″ 7606 042 **648.–**				**Dia** Order No. **USD**
Solar Hand Pump to fill and increase pressure **for use with Solar-Divicon**	7639 450 **255.–**					Order No. **USD**
Solar Expansion Tank [2] with mounting hardware including: ■ air bleed ■ shut-off valve	4¾ 18 7248 241 **250.–**	6½ 25 7248 242 **320.–**	10½ 40 7248 243 **405.–**	13¼ 50 7248 244 **603.–**	21¼ 80 7248 245 **758.–**	USG ltr Order No. **USD**
Glycol Tester (Hydrometer) for solar fill	7316 074 **87.–**					Order No. **USD**
"Tyfocor-HTL" Solar Fill ■ 5.28 USG / 20 Ltr. ■ premixed for protection to -31°F / -35°C	7316 098 **250.–**					Order No. **USD**
Copper Adaptor (each) • length: 4″, to adapt from 22mm Ø to ¾″ Ø pipe	9543 380 **24.–**					Order No. **USD**
Copper Connector (each) • length: 2½″, to interconnect 22mm Ø componentry	5276 590 **11.3**					Order No. **USD**

[1] Requires 2 x 9543 380 copper adaptors if ordered individually (and not with an installation fittings set). ***List Price*** ***24.–***

[2] Requires 1 x 9635 592 brass coupling if ordered individually (and not with an installation fittings set). ***List Price*** ***36.–***

<-Return to contents

Preassembled Pumping Stations

Solar-Divicon

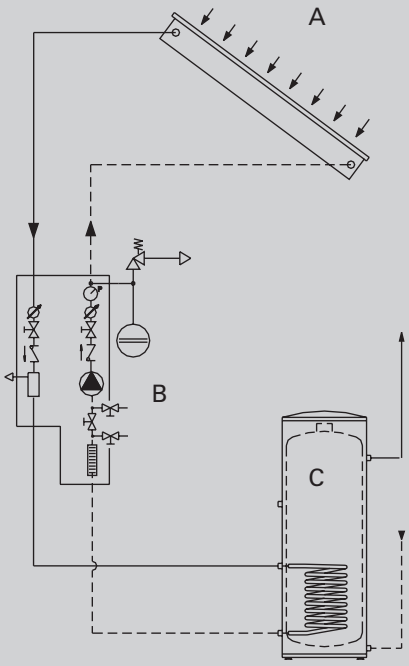

A Solar Collector
B Solar-Divicon
C Vitocell-V/B
DHW Storage Tank
D Mounting Kit

	DN20B	DN25B	Model No.
Preassembled Solar Pumping Station with everything required to pump solar fluid from a collector array to a Vitocell internal coil storage tank. Fast and easy to install with wall-mount bracket. Attractive finished appearance and safe, efficient and reliable operation. Available in two sizes, for both residential and light commercial applications. 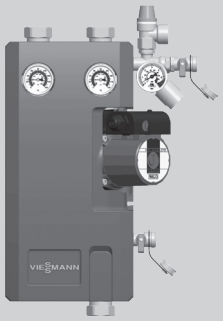	7570 634 **1,270.–** Star S16U-15	7552 453 **1,700.–** Star S30U-25	Order No. **USD** System Pump
Flex Pipe 500mm x ¾"G to connect Solar-Divicon to expansion tank sizes 18, 25 or 40L **only**	7497 468 **46.–**		Order No. **USD**

Components included:
- three-speed pump
- system fill manifold
- 2 x thermometers / 2 x ball valves
- 2 x flow check valves in solar loop
- pressure relief valve, 87 psig
- pressure gage
- flow meter
- air separator
- insulation cover

- DN 20B dimensions:
  H 16" / 405mm
  W 13½" / 344mm
  D 6" / 150mm
- DN 20B supply/return connections:
  ¾" copper

- DN 25B dimensions:
  H 19½" / 498mm
  W 12" / 307mm
  D 6¼" / 160mm
- DN 25B supply/return connections:
  1" copper

3.2

Wi-Fi Connectivity

Heating System Operation with ViCare

- The **ViCare App** gives the system operator a high level of operational comfort with minimal knowledge of heating technology required.
  For more information about ViCare App see www.vicare.info
- With **Vitoconnect OPTO2**, the heating system may be accessed via the Internet over Wi-Fi.

VICARE APP

Remote Operation

Communication Technology

Mobile Applications

ViCare App

Important:
The ViCare app can be used in conjunction with an internet-compatible Viessmann heating system or in conjunction with the Viessmann Vitoconnect WLAN module or a Viessmann heating system with an integrated Internet interface. Please refer to the boiler manual for more information. Please note that functions available in ViCare are depending on functions available on the boiler itself. Please see (include VICare FAQ url)

ViCare App (IOS/Android) - the best way for owners to connect to a Viessmann residential heating system.

The ViCare app offers the possibility to control your heating system via any connected mobile device. With a simple user interface ViCare makes operation intuitive and accessible on demand.

Peace of Mind
Warmth and reassurance in one

- In one view, get an instant check if everything is in order

Save costs
Set your preferred heating schedule and save money when you're away from home

- Simple, convenient operation of your heating system
- Store daily schedules and automatically save energy costs
- Set basic functions at the touch of a button on your smartphoneOnDemand Domestic Hot Water saves money and increases comfort

Core functions (depending on heating system):

- Displaying the status of your heating
- Capability to set up the most important functions of your heating system
- Store your daily routine to automatically save energy costs
- View outside temperature history
- Shortcuts e.g.: I want hot water or I'm away
- Holiday program

Please note: We publish the functions gradually! You can expect several small updates in the next weeks and months. There will always be something new to discover.

Communication Technology

Communication

Vitoconnect, OPTO2 Series

Vitoconnect is a wall-mounted Wi-Fi module which provides an Internet interface for remote operation of heating systems using the ViCare App.
(heating circuits and DHW configuration only)

Communication:
- Via Optolink interface on the boiler control
- Via Wi-Fi with the wireless router

Connections:
- Power connector for power supply (120/1/60)
- USB for connection cable to Optolink port
- Wi-Fi communication to connect to the Internet

Standard Equipment:
- Wall-mounted Wi-Fi module for connection to a wireless router
- Power supply with power cord, L = 5 ft / 1.5 m
- Optolink/USB connection cable from Wi-Fi module to boiler control, L = 10 ft / 3 m

Important!
- Prior to startup, please verify the system requirements for communication over the local Wi-Fi network
- Port 443 (HTTPS) and port 123 (NTP) must be open on the local network
- A high-speed Internet connection with unrestricted data volume is required to operate Vitoconnect
- The distance between Vitoconnect and the boiler should be 1 - 8 ft / 0.3 - 2.5 m

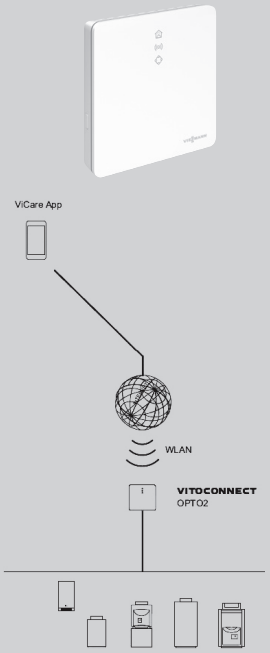

7865 542
855.-

Order No.
USD

Compatible Controls:

Viessmann boilers and Vitotronic controls equipped with the Optolink interface.

Controls for wall-mounted boilers:
- Vitotronic 200, HO1 for Vitodens 200, WB2B Series
- Vitotronic 200, HO1A for Vitodens 200, WB2B Series
- Vitotronic 200, HO1B for Vitodens 200, B2HA/B2HB Series

Controls for floor-standing boilers:
- Vitotronic 200, HO1B for Vitodens 222, B2TA/B2TB Series
- Vitotronic 200, KW2 for Vitorond 100, VR1 Series
- Vitotronic 200, KW6B for Vitocrossal 300, CU3A Series

Controls for solid fuel boilers:
- Ecotronic with software version 2.12 for Vitoligno 300-C Series

Further information at www.vicare.info

<-Return to contents

Versatronik

Gateways for Building Management Systems

Communication	System Configuration					Gateway	
	for Product Series	Max. No. of Target Devices	Cascade Control Required [1]	Boiler Comm. Card Required	Cascade Comm. Card Required		
	Our gateways are designed to integrate equipment and devices that use non-standard or proprietary HVAC protocols like LON, OpenTherm, MODBus, and RESOL with Building Management and Automation Systems utilizing industry standard communication protocols, e.g. BACNet. Gateways are valuable tools for system integrators and engineers who need to read, relay and control multiple variables and parameters between different building subsystems, all the while monitoring building systems from a central or remote location.						
Versatronik 581 Vi/LON	MW1B (B2HA, B2HB, CU3A) GW6B (CM2, CA3B) MW2C	8	Yes Multi Boiler System	LON	LON	7576 451 **4,910.–**	Order No. **USD**
Versatronik 501 NR2/LON	B2HA, B2HB, CU3A, VD2A, VD2, MW1B (GC1B/GW5B)	4	Yes MW1B Multi Boiler	LON	LON	7521 345 **4,680.–**	Order No. **USD**
Versatronik 502 NR2/MODBUS (RS 485)	B2HA, B2HB, CU3A, VD2A, VD2, MW1B (GC1B/GW5B)	4	Yes MW1B Multi Boiler	LON	LON	7521 346 **4,680.–**	Order No. **USD**
Versatronik 505 NR2/BACIP	B2HA, B2HB, CU3A, VD2A, VD2, MW1B (GC1B/GW5B)	4	Yes MW1B Multi Boiler	LON	LON	7521 347 **5,060.–**	Order No. **USD**
Versatronik 521 OT/LON	WB1B, B1HA, B1KA	1	No	No	n.a.	7521 348 **2,430.–**	Order No. **USD**
Versatronik 522 OT/MODBUS	WB1B, B1HA, B1KA	1	No	No	n.a.	7521 349 **1,910.–**	Order No. **USD**
Versatronik 525 OT/BACIP	WB1B, B1HA, B1KA	1	No	No	n.a.	7521 350 **2,360.–**	Order No. **USD**
Versatronik 503 NR2/Analog Bridge	MW2C (B2HE,B2HB)	1	Yes MW2C Multi Boiler	LON	LON	7984 983 **927.–**	Order No. **USD**

4.2

Overview of Datapoints:
- Boiler setpoint (writable)
- DHW setpoint (writable)
- Boiler water temperature
- Modulation level
- Current modulation level
- Room setpoint temperature
- Outside temperature
- Boiler heat exchanger temperature
- DHW setpoint
- °C or °F selectable
- OEM diagnostic codes
- Boiler faults
- Flame status
- and more - see technical literature

Hot water heating boiler
91 to 245 MBH / 27 to 72 kW

Vitorond 100 with Beckett Burner
and HydroLevel Control

Vitorond 100 with Beckett Burner
and Vitotronic 100 KW10B Control

Vitorond 100 ®

VR1 Series

Oil-Fired Boiler
for hydronic heating systems
of cast iron sectional construction
Heating input: 91 to 245 MBH 27 to 72 kW

- **Eutectoplex heat exchanger** for high operational reliability and a long service life.
- Triple-pass heat exchanger design provides reduced emissions, efficient fuel utilization and low heating costs.
- Economical and environmentally friendly operation *A.F.U.E. of up to **87.1%**.*
- Problem-free cleaning access facilitated by a hinged (left or right), swing-open combustion chamber door providing easy access to all three heat exchanger passes from boiler front.

®This trademark is registered with the U.S. Patent and Trademark Office.

<-Return to contents

VITOROND 100

for Chimney Vented Applications

System type	Boiler control
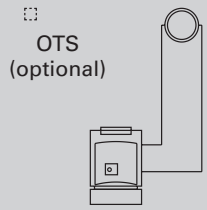 • 1 heating circuit without mixing valve	**HydroLevel** **thermal reset boiler control** • with wall mounting kit • with integrated low-water cut-off function **Outdoor Reset Kit** 9648 803 List Price **82.–**
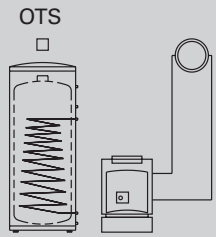 • 1 heating circuit without mixing valve • 1 DHW production circuit	**Vitotronic 100, KW10B** **for high temperature heating systems** • with indoor/outdoor system control • with domestic hot water production and pump output • with boiler pump output • with compiled fault output (dry contact) • with 0-10 VDC input • with adjustable high limit and fixed high limit • with space heating circuit switch • with power indication, call for heat indication, and burner/FHL fault indication • with the Viessmann quick-connect plug-in system
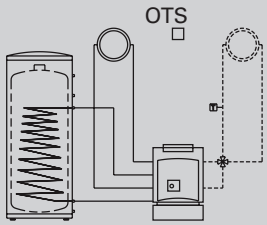 • 1 circuit without mixing valve • 1 circuit with mixing valve • 1 DHW production circuit	**Vitotronic 200, KW2** **for multiple temperature heating systems** Indoor/outdoor, digital boiler and heating system control • with digital tracking of day and week • with programmable time periods, heating curves, temperature setpoints and operating programs • with DHW production management (sensor included) • with integrated diagnostic system • with adjustable high limit and fixed high limit • with FHL test switch • with power indication and sensor/burner fault indication • with the Viessmann quick-connect plug-in system

▶ *Boiler standard working pressure: 30 psig; maximum working pressure: 45 psig. For 45 psig, order optional pressure relief valve 9549 944,* ***List Price 66.–.***

▶ *A matrix outlining all configurations of Vitorond 100 is shown in Appendix 5. An Order No. is supplied for each possible configuration, so all necessary components may easily be ordered together.*

▶ *Boiler is suitable for operation with natural draft chimney system. Sizes 91-140 may be direct vented (see section 7.1 - 14-15). Follow all applicable codes.*

Standard Equipment of Boiler:
Boiler shell (insulation preinstalled up to size-140), combustion chamber insert, installation fittings c/w 30 psig pressure relief valve, drain valve, Tridicator, boiler control (above), burner wiring harness, burner (above) c/w correct oil nozzle and blocked vent safety switch (Canada only).

Single Boiler; BOILER AND INSULATION ONLY
PLEASE NOTE THERE ARE NO BURNERS INCLUDED IN THE PART NUMBERS LISTED BELOW

Boiler options	VR1-91	VR1-105	VR1-140	VR1-161	VR1-196	VR1-245
	7249048 **2,410.–**	7249049 **2,860.–**	7249050 **3,120.–**	VR10325 **3,869.–**	VR10326 **4,530.–**	VR10327 **5,180.–**

Control Options- choose 1 option
Please note that the packages include installation fittings, control and technical literature. For KW2 the Power Pump Module will also be included

Control Option	VR1-91	VR1-105	VR1-140	VR1-161	VR1-196	VR1-245
HydroLevel	Z015259 **777.–**	Z015259 **777.–**	Z015259 **777.–**	Z015260 **708.–**	Z015260 **708.–**	Z015260 **708.–**
Vitotronic, 100 KW10B	Z015255 **2,582.–**	Z015255 **2,582.–**	Z015255 **2,582.–**	Z015256 **2,571.–**	Z015256 **2,571.–**	Z015256 **2,571.–**
Vitotronic, 200 KW2	Z015257† **4,016.–**	Z015257† **4,016.–**	Z015257††† **4,016.–**	Z015258 **4,005.–**	Z015258 **4,005.–**	Z015258 **4,005.–**

† Please note that a field supply nozzle of Hago 0.5 x 60°B DFN will need to be installed for DV applications.
†† Please note that a field supply nozzle of Hago 0.6 x 60°B will need to be installed for DV applications.
††† Please note that a field supply nozzle of Hago 0.75 x 60°B will need to be installed for DV applications.

Burner options-choose 1 option
Please note that the direct vent burners include the burner, direct vent system, and the fresh air kit (for Beckett and Carlin only)

	VR1-91	VR1-105	VR1-140	VR1-161	VR1-196	VR1-245
Riello Chimney Vent	7311316 **1,380.–**	7311316 **1,380.–**	7311317 **1,430.–**	7311317 **1,430.–**	7311317 **1,430.–**	7311318 **1,790.–**
Beckett Chimney Vent	7452064 **1,180.–**	7452065 **1,180.–**	7452066 **1,180.–**	7452067 **1,180.–**	7452068 **1,150.–**	7452068 **1,150.–**
Carlin Chimney Vent	7749024 **1,210.–**	7749025 **1,210.–**	7749026 **1,210.–**	7749027 **1,210.–**	7749028 **1,270.–**	7749029 **1,270.–**
Riello Direct Vent	ZK02854 **4,119.–**	ZK02854 **4,119.–**	ZK02855 **4,169.–**	N/A	N/A	N/A
Beckett Direct Vent	ZK02856 **3,187.–**	ZK02857 **3,187.–**	ZK02858 **3,187.–**	N/A	N/A	N/A
Carlin Direct Vent	ZK03208 **3,237.–**	ZK03209 **3,237.–**	ZK03210 **3,237.–**	N/A	N/A	N/A

Specifications

	VR1-91	VR1-105	VR1-140	VR1-161	VR1-196	VR1-245
Input (MBH)	91	105	140	161	196	245
Output (MBH)	80	92	122	140	172	215
Efficiency (A.F.U.E.)	87%	87%	87%	87%	87.1%	87.1%
Length (in)	38½	44	44	36	37½	42½
Width (in)	19¾	19¾	19¾	22½	22½	22½
Height (in)	33	33	33	39¾	39¾	39¾
Boiler Water Content (USG)	9.2	11.6	11.6	12.7	16.1	19.3
Supply/Return Connection (in)	1½	1½	1½	2	2	2
Boiler Vent Connection (in)	5	5	5	6	6	6
Weight (lbs)	363	445	447	492	608	725

<-Return to contents

VITOROND 100

for Direct Vented Applications

System Type	Boiler Control
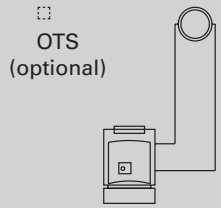 • 1 heating circuit without mixing valve	**HydroLevel** **thermal reset boiler control** • with wall mounting kit • with integrated low-water cut-off function **Outdoor Reset Kit** 9648 803 List Price **82.–**
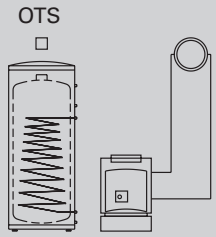 • 1 heating circuit without mixing valve • 1 DHW production circuit	**Vitotronic 100, KW10B** **for high temperature heating systems** • with indoor/outdoor system control • with domestic hot water production and pump output • with boiler pump output • with compiled fault output (dry contact) • with 0-10 VDC input • with adjustable high limit and fixed high limit • with space heating circuit switch • with power indication, call for heat indication, and burner/FHL fault indication • with the Viessmann quick-connect plug-in system
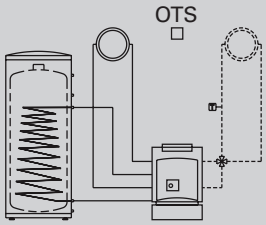 • 1 circuit without mixing valve • 1 circuit with mixing valve • 1 DHW production circuit	**Vitotronic 200, KW2** **for multiple temperature heating systems** Indoor/outdoor, digital boiler and heating system control • with digital tracking of day and week • with programmable time periods, heating curves, temperature setpoints and operating programs • with DHW production management (sensor included) • with integrated diagnostic system • with adjustable high limit and fixed high limit • with FHL test switch • with power indication and sensor/burner fault indication • with the Viessmann quick-connect plug-in system

5.1

▶ *Boiler standard working pressure: 30 psig; maximum working pressure: 45 psig.*
For 45 psig, order optional pressure relief valve 9549 944, ***List Price 66.–.***

▶ *A matrix outlining all configurations of Vitorond 100 is shown in Appendix 5. An Order No. is supplied for each possible configuration, so all necessary components may easily be ordered together.*

▶ *Boiler is suitable for operation with natural draft chimney system (see section 7.1 pages 12-13)*
Sizes 91-140 may be direct vented.
Follow all applicable codes.

Standard Equipment of Boiler:
Boiler shell (insulation preinstalled up to size-140), combustion chamber insert, installation fittings c/w 30 psig pressure relief valve, drain valve, Tridicator, boiler control (above), burner wiring harness, burner (above) c/w correct oil nozzle.

Standard equipment

Boiler shell with insulation (pre-installed up to VR1-140)
Combustion chamber insert
Tridacator

Boiler standard working pressure: 30 psig; max 45 psig.
For 45 psig order PRV: 9549 944 List: **59.–**
HydroLevel thermal reset boiler control

With wall mounting kit

With integrated low-water cut-off function
Optional outdoor reset kit: 9648 803: **74.–**

Vitotronic 100, KW10B for high temperature heating systems

- With indoor/outdoor system control
- With domestic hot water production and pump output
- With boiler pump output
- With compiled fault output (dry contact)
- With 0-10 VDC input
- With adjustable high limit and fixed high limit
- With space heating circuit switch
- With power indication, call for heat indication and burner/FHL fault indication
- With the Viessmann quick-connect plug-in system
- Cannot control mixing valves

Vitotronic 200, KW2 for multiple temperature heating systems

- Indoor/outdoor, digital boiler and heating system control
- With digital tracking of day and week
- With programmable time periods, heating curves, temperature setpoints and operating programs
- With DHW production management (sensor included)
- With integrated diagnostic system
- With adjustable high limit and fixed high limit
- With FHL test switch
- With power indication and sensor/burner fault indication
- Controls 1 mixing valve

<-Return to contents

VITOROND 100

Accessories

Accessories

Vitorond 100	VR1 91	VR1 105	VR1 140	VR1 161	VR1 196	VR1 245	Model No.
Boiler Stand for Vitorond 100 **9¾" / 250 mm height**	7133 073 **298.–**	7133 074 **345.–**		7133 075 **345.–**	7133 076 **371.–**		Order No. **USD**
DHW Pump Module for Vitorond 100 with Honeywell or HydroLevel control	9543 430						Order No. **USD**
Wiring Harness to integrate Tjernlund Combustion Air In-Forcer™ (field supplied) with Vitotronic control	7133 921 **164.–**						Order No. **USD**

Transport

Carrying Handles	7189 602 **201.–**			n.a.			Order No. **USD**
Two-Wheel Truck • Special two-wheel truck for Viessmann boilers and domestic hot water tanks • For use across flat surfaces and up/down stairs • Carries weight of up to 850 lbs / 400 kg (max.)	9521 645 **2,590.–**						Order No. **USD**
Transport Panel • For use with Viessmann Two-Wheel Truck (above)	7198 575 **181.–**			n.a.			Order No. **USD**

Viessmann 4-way Mixing Valves	¾"	1"	1¼"	1½"	2"
	7134736 **515.–**	7134737 **552.–**	7134738 **615.–**	7134739 **683.–**	7134740 **982.–**

5.1

Controls accessories

Vitotronic	for Vitotronic 200 KW2	Model No.
Mixing Valve Actuator		
Mixing Valve Controller Accessory Kit to control a single heating circuit with one mixing valve; includes: • mixing valve motor to operate ¾ to 2½" Viessmann mixing valves • supply temperature sensor	7542 257 **417.–**	Order No. **USD**
Remote Controls		
Vitotrol 200-A Remote Control for a single heating circuit to program: • daytime temperature and operating program; • with party and energy-saving button • with room temperature sensor for room-dependent activation (for heating circuit with mixing valve only) *If the Vitotrol 200-A is to operate based upon room-dependent activation, ensure placement in a* ***centralized location.***	7438 363 **314.–**	Order No. **USD**
Vitotrol 300-A Remote Control for a single heating circuit to program: • daytime and nighttime temperature, DHW temperature, operating and holiday program, party and energy-saving features • switching times for heating circuit, DHW tank and recirculation pump • with illuminated display and textual prompts • with room temperature sensor for room-dependent activation (for heating circuit with mixing valve only) *If the Vitotrol 300-A is to operate based upon room-dependent activation, ensure placement in a* ***centralized location.***	7571 231 **529.–**	Order No. **USD**
Room Temperature Sensor if the Vitotrol cannot be installed in a centralized location *(must be sold with Remote Control RS, Vitotrol 200-A, or Vitotrol 300-A)*	7133 379 **218.–**	Order No. **USD**
Expandability		
KM-BUS Expansion Module to connect up to 9 devices to the single KM-BUS connection of the boiler control (Vitotrol, Switching Module-V, etc.)	7133 393 **201.–**	Order No. **USD**
Communication		
Switching Module-V to expand the capabilities of Vitotronic 200 and 300 via: • remote burner enable and disable • providing for additional heat demand (pool, spa, snowmelt, etc) • using with an external contact or Telephone Interface Module to remotely change heating/operating mode of the heating circuit	7133 387 **500.–**	Order No. **USD**

<-Return to contents

VITOROND 100

Multiple Boiler Applications

Vitorond 100			
Multiple Boiler Applications			
	Lead-Lag Expansion Kit (single-stage boilers **only**) for load-dependent staging of a second boiler. ***Expansion Kit is NOT required for Vitocontrol-S.*** First boiler must be equipped with either Vitotronic 200/300. Second boiler must be equipped with Vitotronic 100 KW10B. Note: Lead- Lag Expansion kit is not required for Vitocontrol-S, and should be used in applications where there is no Vitocontrol-S".	7133 897 **1,120.–**	Qty Order No. **USD**

5.1

Vitocrossal 200 ®

CI2 Series and accessories

Vitocrossal 200
CI2 Series 399, 500, 750, 1000, 1500 and 2000

High efficiency, gas-fired condensing boiler with pre-mix modulating cylinder burners for natural gas (NG) or liquid propane gas (LPG), with Inox-Crossal heat exchanger made of high-grade SA240 stainless steel.

For operation without low limit on boiler return water temperature

For closed loop hot water heating systems with maximum supply water temperatures of 210°F (99°C) for a maximum operating pressure of 80 psig.

Heating input: 399 to 2000 MBH (117 to 586 kW)

- Efficiency up to 98% through intensive condensation. The flue gas temperature is only approximately 9°F-27°F (5°C-15°C) above boiler return temperature.
- Highest water volume in class; no primary boiler pump required
- Efficient combustion control with Lambda Pro Plus with Self Calibrating Active O2 Trim Technology; realtime O2 trim, fuel conversion and altitude adjustment with push of a button
- High operational reliability and long service life with corrosionresistant Inox-Crossal stainless steel heat exchanger; class leading low pressure drop and thermal efficiency
- Up to 30:1 modulating MatriX cylinder burner ensures long, uninterrupted operation; meets Low NOx certification
- Cascading of up to 16 devices possible (up to 32,000 MBH)
- Low NOx <20 ppm (@3% 02 with natural gas)
- High altitude operation up to 10,000 ft. (3000 m) with a simple electronic adjustment.

<-Return to contents

VITOCROSSAL 200

Vitocrossal 200	399	500	Model No.
Single Boiler Installations			
Vitocrossal 200, CI2	ZK06778 **13,151.–**	ZK06779 **15,551.–**	Order No. **USD**
Input [1]	50-399 14.7-117	50-500 14.7-147	MBH kW
Output (thermal efficiency)	391 114	490 143	MBH kW
Technical Data			
Combustion Efficiency [2] **Thermal Efficiency** [2]	97 98	97 97.9	% %
Dimensions Length	39 992	39 992	inches mm
Width	29½ 750	29½ 750	inches mm
Height	64½ 1640	64½ 1640	inches mm
Boiler Vent Connection	4 104.2	4 104.2	inches mm
Weight Includes burner, control, thermal insulation and jacketing. Excluding vent system	789 358	789 358	lbs kg

6.1

Standard Boiler Equipment
Includes:

- *Low water cut-off*
- *Gas shut off valve*
- *Safety header (c/w 80 psig pressure relief valve, air vent and temperature/pressure gauges)*
- *Drain valve*
- *Thermal insulation*
- *Cylinder burners*
- *Integrated boiler control unit with 7in. touchscreen display*
- *NG to LPG labeling kits*
- *Product documentation*

Optional Sensors ***(to be purchased separately if required for the application)***

- *Outdoor temperature sensor*
  Part# 7837 053, ***List Price 195.–.***
- *Immersion sensor for DHW tank or low loss header*
  Part# 7179 488, ***List Price 227.–.***
- *Strap-on temperature sensor for common supply*
  Part# 7832 365, ***List Price 258.–.***

Boiler standard working pressure: 80 psig

- *30 psig, order optional pressure relief valve ZK07627,* ***List Price 449.–.***
- *50 psig, order optional pressure relief valve ZK07628,* ***List Price 514.–.***
- *55 psig, order optional pressure relief valve ZK07629,* ***List Price 330.–.***

[1] *Minimum input for NG; for minimum input LP, please see Technical Data Manual.*

[2] *Tested to ANSI/AHRI standard 1500 Performance Rating of Commercial Space Heating Boilers / DOE Test Procedure 81 FR 89276 / U.S. Standards ANSI Z21.13/CSA 4.9.*

Accessories

Isolation Valves

Boiler isolation valves
Motorized isolation valve, power open, spring return, for use with Vitocrossal 200 CI2.

• Isolation Valve (Belimo) 2" for CI2 399/500	7946 553 **1,150.–**	Order No. **USD**
• Isolation Valve (Belimo) 2.5" for CI2 750/1000	7946 552 **1,260.–**	Order No. **USD**
• Isolation Valve (Belimo) 4" for CI2 1500/2000	7946 551 **4,500.–**	Order No. **USD**

Exhaust Vacuum

Exhaust vacuum relief damper
Vacuum relief damper, for use in CI2 venting configurations to protect venting system from damage during possible power interruptions which could lead to sudden differences in pressure.

• Exhaust Vacuum Relief Damper 4" for CI2 399/500	7946 556 **643.–**	Order No. **USD**
• Exhaust Vacuum Relief Damper 6" for CI2 750/1000/1500	7946 555 **712.–**	Order No. **USD**
• Exhaust Vacuum Relief Damper 8" for CI2 2000	7946 554 **776.–**	Order No. **USD**

Flue Gas Damper

Flue gas damper for common venting systems
Common Venting motorized flue gas damper. For use with Vitocrossal 200 CI2.
Note- common vented boilers must all be the same size. Order one vent damper per boiler.

• Flue Gas Damper 4" for CI2 399/500	7946 559 **1,870.–**	Order No. **USD**
• Flue Gas Damper 6" for CI2 750/1000/1500	7946 558 **1,930.–**	Order No. **USD**
• Flue Gas Damper 8" for CI2 2000	7946 557 **1,990.–**	Order No. **USD**

Filter Status Indicator

Combustion Air Intake filter status indicator
Filter status set for Vitocrossal 200 CI2. Air switch (including wiring) and mounting set. This filter status set is universal to all sizes of CI2.

• Filter Status Set	7946 560 **71.–**	Order No. **USD**

Air Intake Kits

Direct vent (2 pipe) system Kit
Air intake kit for Vitocrossal 200 CI2 boilers. Includes air intake box, spiral coiled flexible air intake piping and connection adapter. Order 1 per boiler.

• Air Intake Kit 399-500 MBTU / 127-160 kW	7946 564 **441.–**	Order No. **USD**
• Air Intake Kit 750-1000 MBTU / 238-318 kW	7946 563 **455.–**	Order No. **USD**
• Air Intake Kit 1500 MBTU with Air Box	ZK06673 **1,419.–**	Order No. **USD**
• Air Intake Kit 2000 MBTU with Air Box	ZK06674 **1,408.–**	Order No. **USD**

Air Filterbox

Combustion air filter for direct vent (2 pipe) system (includes air filter)

• Air Filterbox 399-1000 MBTU / 127-318 kW *-Need to order with either P/N 7946 564 (ci2 399-500) or P/N 7946 563(CI2 750-1000).*	7946 566 **1,196.–**	Order No. **USD**
• Air Filterbox 1500-2000 MBTU / 477-636 kW *-Need to order with either P/N ZK06673(CI2 1500) or ZK06674(CI2 2000)*	7946 565 **1,453.–**	Order No. **USD**

Air filters

Burner mounted combustion air filter - room air dependent operation

• Airfilter 399-500 MBTU / 127-160 kW	7946 571 **247.–**	Order No. **USD**
• Airfilter 750- 1000 MBTU / 238-318 kW	7946 570 **383.–**	Order No. **USD**
• Airfilter 1500 MBTU / 477 kW	7946 569 **1,280.–**	Order No. **USD**
• Airfilter 2000 MBTU / 636 kW	7946 568 **1,480.–**	Order No. **USD**

CPVC Vent Starter Adaptor

• 4" (104.2mm) for use with CI2 399/500	7975 564 **74.–**	Order No. **USD**
• 6" (155mm) for use with CI2 750/1000/1500	7975 565 **109.–**	Order No. **USD**
• 8" (205.2mm) for use with CI2 2000	7975 566 **205.–**	Order No. **USD**

<-Return to contents

Accessories

Combustion Air Interface Device

Interface Combi Air Device		
CI2 24VAC	7984 763 **483.–**	Order No. **USD**
CI2 120VAC	7984 764 **467.–**	Order No. **USD**

Seismic Restraint Kit

Seismic Restraint Kit		
Engineered seismic bracket kits, which comply with local seismic requirements	7975 847 **1,100.–**	Order No. **USD**

Accessories

Heating circuit control unit extension

EM-M1 mixing valve extension kit (wall mounting maximum of 3) (PlusBus subscriber) For one heating circuit with mixing valve, fully wired. Includes valve mounted 120VAC mixing valve motor for Viessmann 3 and 4 way mixing valves Flow temperature sensor as contact temperature sensor (NTC 10 kOhm) with connecting lead (5.8 m long) and plug Plug for heating circuit pump and mixing valve motor Power cable and PlusBus cable with plug With immersion temperature sensor connector for Low-Loss header (immersion temperature sensor must be ordered separately)	ZK06488 **1,030.–**	Order No. **USD**

Viessmann 3-Way Mixing Valves	¾″	1″	1¼″	1½″	2″	Dia
	7134 742	7134 743	7134 744	7134 745	7134 746	Order No.
	518.–	**550.–**	**621.–**	**694.–**	**818.–**	**USD**

Centra Mixing Valves

Heating circuit control unit extension

EM-M1 24V mixing valve extension kit (wall mounting maximum of 3) (PlusBus subscriber) For one heating circuit with mixing valve, fully wired. Flow temperature sensor as contact temperature sensor (NTC 10 kOhm) with connecting lead (5.8 m long) and plug Plug for heating circuit pump and mixing valve motor Power cable and PlusBus cable with plug	7970 653 **828.–**	Order No. **USD**

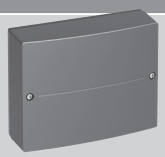

Centra Mixing Valve Motor, 24/1/60 • for Centra 3 way mixing valve only • order one mixing valve per low-temperature heating circuit	9544 483 **887.–**	Order No. **USD**

Centra 3-Way Mixing Valves ■ including flange set **MV Set (Centra), 3-Way NTC**	2½″	3″	4″	5″	6″	Dia
	ZK07111	ZK07112	ZK07113	ZK07114	ZK07115	Order No.
	1,247.–	**1,820.–**	**2,316.–**	**3,620.–**	**5,137.–**	**USD**

Function extensions

EM-P1 extension (PlusBus subscriber) Function extension inside enclosure for wall mounting. Connection for heating circuit pump for the heating circuit without mixing valve Connection for DHW circulation pump Immersion temperature sensor connector for Low-Loss header (immersion temperature sensor must be ordered separately) *Required for e.g. a single heating circuit without mixing valve with Low-Loss header (separate heating circuit pump).*	7956 969 **560.–**	Order No. **USD**

EM-EA1 extension (PlusBus subscriber) Function extension inside enclosure for wall mounting. Using the inputs and outputs allows **one** of the following functions to be achieved. Up to **max. 3** EM-EA1 extensions can be connected to a boiler. Connection of an external solenoid valve External extractor interlock Fault message input 24 V and block system Fault message input 120 V and block system Fault message output Operating mode changeover (all heating circuits) Input 0 - 10 V for external temperature demand *Required for connection of fault messages, e.g. from the condensate removal pump.*	7956 970 **680.–**	Order No. **USD**

<-Return to contents

VITOCROSSAL 200

Control unit accessories

Wago Communication Technology

Wago Gateway

Wago BACnet/IP Gateway Wall-Mount	7959 026 **1,330.–**	Order No. **USD**
Wago BACnet/IP with MSTP Router Gateway Wall-Mounted	7959 025 **1,820.–**	Order No. **USD**
Wago MB/RTU Gateway Wall-Mount	7959 027 **1,330.–**	Order No. **USD**
Wago MB/TCP Gateway Wall-Mount	7959 028 **1,330.–**	Order No. **USD**

Accessories

6.2

Remote controls

Vitotrol 200-E Hardwired remote control unit (PlusBus subscriber). With backlit graphic display with plain text. For setting the following functions for one, two, three or up to 4 heating circuits: **Hardwired** communication with the boiler Time programs for heating circuits and DHW tanks Comfort functions, e.g. holiday program/holiday at home program Specification of the set DHW temperature and up to 3 set values for the room temperature With integral room temperature sensor for room temperature hook-up (only for one heating circuit with mixer) The display shows the outside temperature, room temperature and operating conditions. If the Vitotrol 200-E is to be used for room temperature hook-up, site the device in a main living room (lead room). Order room temperature sensor, part no. 7438537, if the Vitotrol 200-E cannot be sited in a suitable location to capture the room temperature. *Max. 2 Vitotrol 200-E per cascade system.*	7372 087 **531.–**	Order No. **USD** **MG 20**

Accessories

Room temperature sensor (NTC 10 kOhm) In an enclosure for wall mounting *To supplement the Vitotrol 200-E* *If the Vitotrol 200-E cannot be sited in a suitable location to capture the room temperature.*	7438 537 **206.–**	Order No. **USD**
Optional **Outside Air Temperature sensor.**	7837 053 **195.–**	Order No. **USD**

Neutralization

Neutralization System • to neutralize acidic condensate • includes 18 lbs / 8 kg neutralization pellets	7441 823 **780.–**	Order No. **USD**
Neutralization Pellets • 18 lbs / 8 kg	9521 702 **177.–**	Order No. **USD**

Standard Pressure Relief Valve 80 psig

LAMBDA PRO$_2$ The CI2 features the industry's most advanced active self-calibrating O_2 trim technology for reduced maintenance, greater accuracy, and combustion efficiency.

Internet Capable

ViGuide App
ViGuide Mobile is a portable commissioning, guided spare parts replacement, and handheld service tool that can be downloaded on IOS and Android operating systems

ViGuide Remote Service Web Application
ViGuide Remote Service Web Application is a connected user interface that utilizes an online (website) application to access boiler data points.

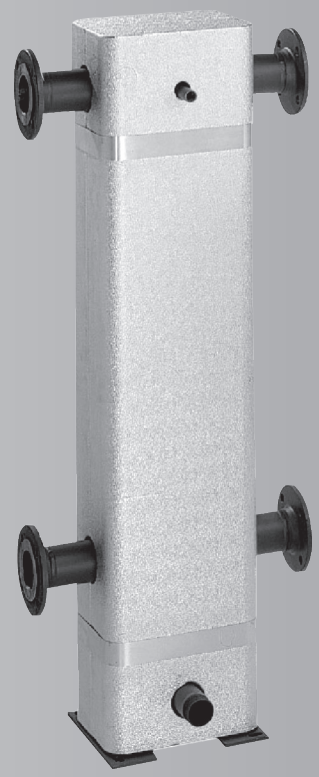

Low-Loss Header, Model 160/80
(not exactly as illustrated)

Low-Loss Headers

Vertical mixing chamber of steel with supply and return tapping for both heat source and heat destination.

- To decouple high flow rate systems from the boiler loop.
- Enables constant flow through boiler.
- Avoids flow problems in secondary heating circuits.
- Promotes boiler condensation when used with condensing boilers.
- Protect boiler heat exchanger.
- Helps eliminate air, sediment, and debris from the heating system.
- Stand-by losses minimized by highly effective foamed-in-place or mineral wool insulation.
- Used as a separation point between boiler and system loop for troubleshooting purposes.

<-Return to contents

Low-Loss Headers

Please refer to Multiple Boiler Manifolds page 2.2-25
to select appropriate Low Loss Header and Insulation compatible with the manifolds.

Model		Header	Insul.	
Low-Loss Header Model 80/60 with insulation to decouple high flow rate systems from the boiler loop. • Max. flow rate 19.5 USGPM / 4.4 m³/hr • 1¼" NPT connections • 2 x 11 x 23" / 50 x 280 x 585 mm	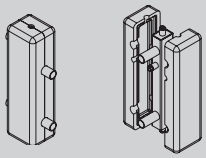		7498 529 **533.–**	Order No. **USD**
Low-Loss Header Model 120/80 with insulation to decouple high flow rate systems from the boiler loop. • Max. flow rate 35 USGPM / 8 m³/hr • 2" NPT connections • 3¼ x 12¾ x 36½" / 80 x 320 x 930 mm	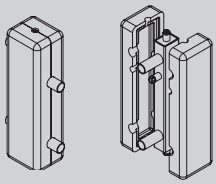		7498 530 **799.–**	Order No. **USD**
Low-Loss Header Model 160/80 • Max. Flow Rate: 44 USGPM / 10 m³/hr • Insulation: PUR Foam [1]	Stock Shipping Weight	7834 470 **1,940.–** 100 45	7834 480 **916.–** 40 18	Order No. **USD** lbs kg
Low-Loss Header Model 200/120 • Max. Flow Rate: 80 USGPM / 18 m³/hr • Insulation: PUR Foam [1]	Stock Shipping Weight	7834 471 **2,470.–** 137 62	7834 481 **1,200.–** 44 20	Order No. **USD** lbs kg
Low-Loss Header Model 250/150 • Max. Flow Rate: 119 USGPM / 27 m³/hr • Insulation: PUR Foam [1]	Stock Shipping Weight	7834 472 **2,770.–** 185 84	7834 482 **1,350.–** 46 21	Order No. **USD** lbs kg
Low-Loss Header Model 300/200 • Max. Flow Rate: 189 USGPM / 43 m³/hr • Insulation: PUR Foam [1]	Stock Shipping Weight	7834 473 **3,070.–** 276 125	7834 483 **1,510.–** 53 24	Order No. **USD** lbs kg
Low-Loss Header Model 400/200 • Max. Flow Rate: 251 USGPM / 57 m³/hr • Insulation: Mineral Wool [2]	Stock Shipping Weight	7834 474 **3,670.–** 340 154	7834 484 **1,630.–** 60 26½	Order No. **USD** lbs kg
Low-Loss Header Model 450/250 • Max. Flow Rate: 374 USGPM / 85 m³/hr • Insulation: Mineral Wool [2]	Stock Shipping Weight	7834 475 **6,300.–** 595 270	7834 485 **2,060.–** 77 34½	Order No. **USD** lbs kg
Low-Loss Header Model 500/300 • Max. Flow Rate: 484 USGPM / 110 m³/hr • Insulation: Mineral Wool [2]	Lead time: 10 weeks Shipping Weight	7834 476 **7,490.–** 860 390	7834 486 **2,330.–** 95 42½	Order No. **USD** lbs kg

For Low-Loss Header sizing, please see Technical Data Manual.

[1] *PUR rigid foam insulation consists of two aluminum half-shells, containing 65mm PUR foam, and cut-outs for all connections.*
[2] *Mineral wool insulation consists of two galvanized steel half-shells, containing 100mm mineral wool, and cut-outs for all connections.*

Model	Connection	Total Height	Total Width	Total Depth	L1	L2	L3	L4	
Technical Data									
Model 160/80	2½" ANSI Flange	56.7 1440	22.1 560	11 280	39.4 1000	15.3 390	3.8 97	12.2 310	inches mm
Model 200/120	3" ANSI Flange	57 1450	23.7 600	12.6 320	39.4 1000	15.3 390	3.8 97	13.8 350	inches mm
Model 250/150	4" ANSI Flange	57.8 1468	25.6 650	13.8 350	39.4 1000	15.7 400	4.2 107	15.7 400	inches mm
Model 300/200	5" ANSI Flange	58.3 1481	27.6 700	15.7 400	39.4 1000	15.7 400	4.2 107	17.7 450	inches mm
Model 400/200	6" ANSI Flange	58.9 1495	31.5 800	15.7 400	39.4 1000	15.7 400	4.2 107	21.7 550	inches mm
Model 450/250	8" ANSI Flange	59.8 1520	33.5 850	17.7 450	39.4 1000	15.7 400	4.2 107	23.6 600	inches mm
Model 500/300	8" ANSI Flange	71.6 1819	35.5 900	19.7 500	47.2 1200	19.7 500	4.2 107	25.6 650	inches mm

Diagram

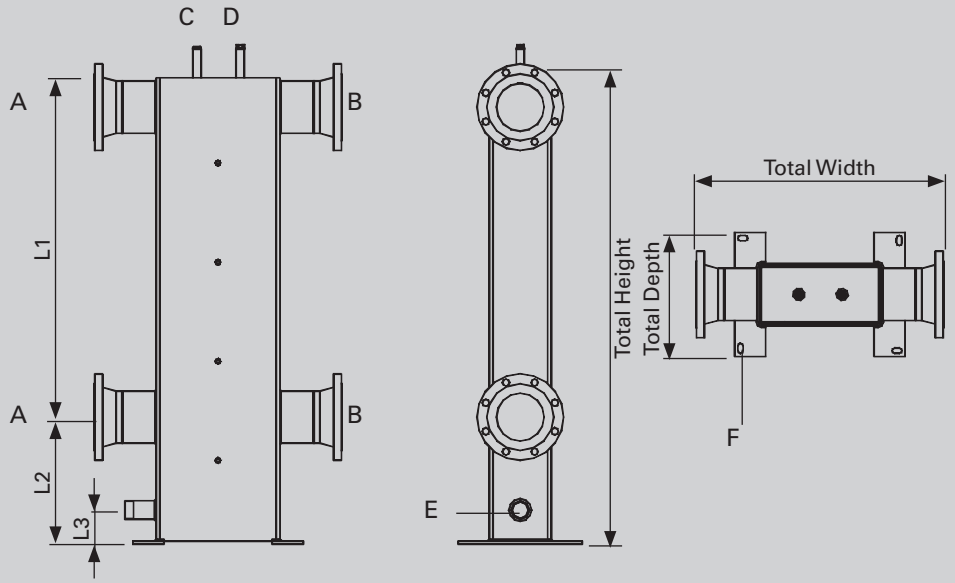

A Boiler supply (top) and boiler return (bottom)
B System supply (top) and system return (bottom)
C Air vent tapping
D Sensor well tapping
E Drain/flush tapping
F Anchor bolt holes

ANSI counter flanges are field supplied.

<-Return to contents

Model Technical Data	Connection	Total Height	Total Width	Total Depth	L1	L2	L3	L4	
Model 160/80	2½″ ANSI Flange	56.7 1440	22.1 560	11 280	39.4 1000	15.3 390	3.8 97	12.2 310	inches mm
Model 200/120	3″ ANSI Flange	57 1450	23.7 600	12.6 320	39.4 1000	15.3 390	3.8 97	13.8 350	inches mm
Model 250/150	4″ ANSI Flange	57.8 1468	25.6 650	13.8 350	39.4 1000	15.7 400	4.2 107	15.7 400	inches mm
Model 300/200	5″ ANSI Flange	58.3 1481	27.6 700	15.7 400	39.4 1000	15.7 400	4.2 107	17.7 450	inches mm
Model 400/200	6″ ANSI Flange	58.9 1495	31.5 800	15.7 400	39.4 1000	15.7 400	4.2 107	21.7 550	inches mm
Model 450/250	8″ ANSI Flange	59.8 1520	33.5 850	17.7 450	39.4 1000	15.7 400	4.2 107	23.6 600	inches mm
Model 500/300	8″ ANSI Flange	71.6 1819	35.5 900	19.7 500	47.2 1200	19.7 500	4.2 107	25.6 650	inches mm

Diagram

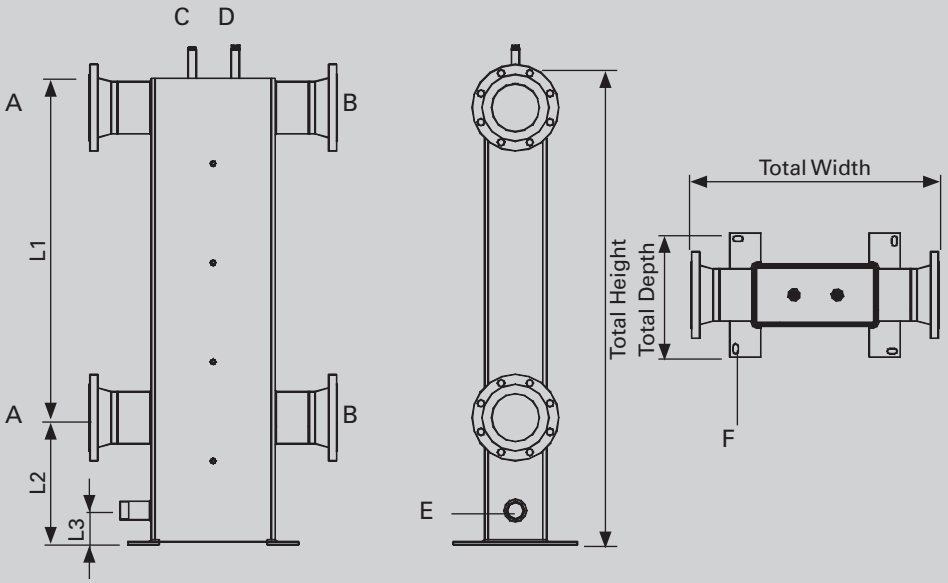

A Boiler supply (top) and boiler return (bottom)
B System supply (top) and system return (bottom)
C Air vent tapping
D Sensor well tapping
E Drain/flush tapping
F Anchor bolt holes

ANSI counter flanges are field supplied.

Viessmann

I. General Provisions

1. All references to "Viessmann" in this document include Viessmann Manufacturing Company (U.S.) Inc. and any parent, subsidiary, or affiliate. References to "Buyer" include all parents, subsidiaries, or affiliates of the party ordering products or services from Viessmann. All sales of Viessmann products and quotations for Viessmann products are governed by these Terms and Conditions of Sale, Delivery, and Payment (the "Terms"), which shall prevail over any inconsistent terms in Buyer's purchase order or other documents. Additional or different terms and conditions in any way altering or modifying these Terms are expressly objected to and shall not be binding upon Viessmann unless specifically accepted by Viessmann in writing. No modification or alteration of these Terms shall occur by Viessmann's shipment of products following receipt of Buyer's purchase order or other document containing additional, inconsistent, or conflicting terms.
2. Any product purchased from Viessmann in the United States is for resale and use only in the United States. Buyer agrees that it will not resell Viessmann products for use or installation outside of the United States and will take all reasonable and necessary steps to ensure that the Viessmann products are resold only for use and installation in the United States.

II. Plans and Specifications

1. Drawings, specifications and technical data appended to or forming part of a specific sales contract shall at all times remain the property of Viessmann, with all rights reserved and shall not be provided, submitted or disclosed to third parties without the express written consent of Viessmann. Changes, alterations, deletions or additions thereto shall not be binding upon Viessmann unless confirmed in writing by Viessmann.

III. Prices and Quotations

1. Viessmann reserves the right to change, alter, amend or revoke prices and quotes, including prices on websites and in pricelists and catalogs, without notice, and all such prices expire and become invalid unless accepted within 60 calendar days.
2. Prices are, except as otherwise agreed, exclusive of cost of packaging, crating, freight or shipping, federal, state or local taxes in effect on date of delivery. All taxes imposed on sales or shipments will be added to the purchase price and be reimbursed by Buyer. All prices and other terms shall be kept confidential and disclosed only as required by law.

IV. Terms of Payment

1. For all Viessmann products, all invoices or accounts, as the case may be, are due and payable in full without deduction thirty (30) days after invoice date, unless otherwise specifically agreed in writing.
2. Notwithstanding the preceding paragraph, all orders are subject to Viessmann's continuing approval of Buyer's credit. If Buyer's credit is not approved or becomes unsatisfactory to Viessmann then Viessmann, in its sole and absolute discretion, may suspend or cancel performance, or require different payment terms, including but not limited to cash on delivery or in advance of shipment. Viessmann, in its sole and absolute discretion, may apply Buyer's payment to any open charges or sums owed, including interest charges.
3. Holdbacks or deductions of any kind whatsoever without prior written authorization from Viessmann are expressly prohibited. Viessmann shall have rights of setoff and recoupment.
4. Discounts, if any, shall be calculated on the cost of products as per invoice, exclusive of cost of packaging, crating, federal, provincial, state or local rates, tariffs or taxes, where applicable, or other costs or surcharges beyond control of Viessmann.
5. Payments must be made in U.S. dollars by bank check, ACH wire transfer or money order. All costs for dishonor, presentment for payment or collection shall be at the expense of the Buyer.
6. Overdue accounts shall bear interest at the rate stated on the face of the invoice.

V. Delivery of Products

1. Viessmann shall not be liable for delay or default in delivery resulting from any cause beyond its control, including but not limited to governmental action, strikes or other labor issues, fire, damage or destruction of products or facilities, wars, acts of terrorism, manufacturers and/or suppliers shortages, availability or timeliness of transportation, materials or supplies, and acts of God (each a "Force Majeure event"). Upon the occurrence of a Force Majeure event: (a) the time for Viessmann's performance shall be reasonably extended; (b) the purchase price to Viessmann shall be adjusted for any increased costs Viessmann incurs from the Force Majeure event; and (c) Buyer shall not be entitled to any other remedy.
2. In the event of delay of delivery of products caused by the Buyer for any reason whatsoever Viessmann shall be entitled to charge the cost of storage calculated at the rate of one half percent (0.5%) per month upon the cost of products, such calculation commencing one month after delivery of Notice of Readiness for shipment and continuing for each and every month or part thereof thereafter until the delivery of products to the Buyer.

VI. Risk of Property

1. Sales of Viessmann products are made FOB Origin, freight collect or FOB Origin, Freight Prepaid and charged back . The FOB point shall be Viessmann's office or warehouse. Title and risk of loss shall pass to Buyer at the FOB point.
2. Deficiencies or defects in products or part thereof shipped or shipment of wrong products or part thereof shall be endorsed upon the bill of lading and shall be communicated to Viessmann in writing within eight (8) calendar days of arrival at destination. Failing such notification shall be deemed to have accepted the products without recourse.

VII. Return of Products

1. No products may be returned to Viessmann without prior written authorization.
2. If returns are authorized by Viessmann, products will be accepted as follows:
(i) Buyer must provide proof of purchase, invoice and/or serial number to receive a Return Products Authorization number from Viessmann. Upon authorization from Viessmann, freight will be prepaid by the buyer.
(ii) Item and packaging must be new and in saleable condition. Twenty-five percent (25%) restocking charge on product returned after 30 days of purchase.
(iii) Electronic parts, where factory seal has been broken are not returnable.
(iv) Discontinued products and/or parts are not returnable.

VIII. Limitation of Liability
Viessmann's total liability to Buyer for any claim arising under the Terms or from the supply of products or services shall not exceed the purchase price specified on the face of the invoice. VIESSMANN SHALL NOT IN ANY EVENT BE LIABLE FOR INDIRECT, SPECIAL, PUNITIVE, CONSEQUENTIAL OR LIQUIDATED DAMAGES
OR PENALTIES, INCLUDING CLAIMS FOR LOST REVENUE, PROFITS OR BUSINESS OPPORTUNITIES, EVEN IF VIESSMANN HAD OR SHOULD HAVE HAD ANY KNOWLEDGE, ACTUAL OR CONSTRUCTIVE, OF THE POSSIBILITY OF SUCH DAMAGES.

IX. Indemnity
Buyer shall and does hereby agree to defend, indemnify and hold Viessmann harmless of and from any and all liability loss, cost, injury, damage, demand and expense (including, without limitation, reasonable attorneys' fees) of any kind whatsoever arising out of, on account of, or in connection with a breach of these Terms, Buyer's negligence or willful misconduct (including that of its employees, contractors, and agents), violation of applicable law by Buyer or any employee or third party acting by or on behalf of Buyer, improper installation of the products and/or any use or misuse of the products. This indemnity shall not be affected or terminated by reason of the termination of these Terms or purchase, for any reason, with respect to all or any part of the products.

X. Warranties
THE WRITTEN LIMITED WARRANTY ACCOMPANYING THE PRODUCTS IS THE EXCLUSIVE WARRANTY APPLICABLE TO THE PURCHASED VIESSMANN PRODUCTS. THAT WARRANTY IS GIVEN IN LIEU OF ALL OTHER WARRANTIES WITH RESPECT TO THE PURCHASED VIESSMANN PRODUCTS. VIESSMANN MAKES NO OTHER WARRANTIES WITH RESPECT THERETO, EXPRESS OR IMPLIED, INCLUDING WITHOUT LIMITATION, ANY WARRANTY OF MERCHANTABILITY OR FITNESS FOR A PARTICULAR PURPOSE. ANY SUCH WARRANTY IMPOSED BY LAW IS LIMITED TO THE PERIOD OF THE LIMITED WARRANTY PROVIDED IN THE LIMITED WARRANTY ACCOMPANYING THE PRODUCTS. NO WARRANTY ARISING BY USAGE OR CUSTOM, OR COURSE OF PERFORMANCE IS GIVEN BY VIESSMANN OR SHALL ARISE IN CONNECTION WITH THAT LIMITED WARRANTY. Some states do not allow limitations on how long an implied warranty lasts, so the above limitation may not apply to you in that respect.

XI. Applicable Law and Forum
1. These Terms shall be governed by the law of Rhode Island without regard to its choice of law principles.
2. All disputes based upon or arising out of these Terms or the parties commercial relationship shall be brought before the state or federal courts of the State of Rhode Island, which shall have exclusive jurisdiction over all such disputes. The parties waive any objections to venue in, or the exercise of jurisdiction by, the state and federal courts in Rhode Island.

XII. Other
1. The invalidity or unenforceability of some or all of these Terms will not affect the validity or enforceability of the other terms. The parties agree to replace any void or unenforceable term with a new term that achieves substantially the same practical and economic effect and is valid and enforceable.
2. Buyer shall pay all of Viessmann's costs of collection, suit or other legal action brought as a result of the commercial relationship between them, including but not limited to attorney's fees and costs, pre-suit through trial and appeal.

XIII. Data Privacy and Security
"Personal Information" means any information Buyer receives or has access to in connection with any products or services hereunder that (a) identifies or relates to an individual or household who can be identified directly or indirectly from that data alone or in combination with other information in Buyer's possession or control or that Buyer is likely to have access to, or (b) is defined by applicable data privacy law as protected personal information.

Buyer will only process, retain, use, or disclose Personal Information to the extent, and in such a manner, as is necessary for the sale, installation, or maintenance of the products or services provided under these Terms. Buyer will not process, retain, use, or disclose Personal Information for any other purpose or in a way that does not comply with these terms, the written instructions of Viessmann, or applicable data privacy law.

Buyer must promptly comply with any Viessmann request or requirement of the Buyer to amend, transfer, or delete the Personal Information, or to stop, mitigate, or remedy any unauthorized processing. Buyer will maintain the confidentiality of all Personal Information, will not sell it to anyone, and will not disclose it to third parties unless Viessmann specifically authorizes the disclosure, or as required by law.

Buyer will limit Personal Information access to those employees and authorized third parties who require Personal Information access to meet the Buyer's obligations under these Terms or any other Agreement with Viessmann. Buyer will require that all such employees and third parties agree to terms regarding data privacy and protection no less stringent than those contained in these Terms. Buyer is solely responsible for such employees and third parties in regard to Personal Information.

Buyer must at all times implement appropriate technical and organizational measures designed to safeguard Personal Information against unauthorized or unlawful processing, access, copying, modification, storage, reproduction, display, or distribution, and against accidental loss, destruction, or damage. Buyer will notify Viessmann as soon as practicable, but in any case within 48 hours, of any unauthorized or unlawful processing, access, copying, modification, storage, reproduction, display, distribution, accidental loss, destruction, or damage to any Personal Information (collectively, "Security Incident"). Buyer will, at its sole expense, take immediate action to remedy all Security Incidents, and will report and update findings to Viessmann promptly as they become available during the course of Buyer's remediation and investigation.

for Gas-Fired Boilers

Venting Categories

Product	Classification	Draft Type	Minimum Material Requirement
Vitorond 200 [1] VD2A Series VD2 Series	Category I	Negative draft, Non-condensing	B-Vent or equivalent
Vitorond 200 VD2A Series VD2 Series	Category III	Positive draft, Non-condensing	Positive pressure vent system for Category III Stainless steel venting UL or ULC listed for Category III boilers
Vitodens 100-W B1HE Series B1KE Series **Vitodens 200-W** B2HA Series **Vitodens 222-F** B2TB Series **Vitocrossal 300** CU3A Series	Category IV	Positive draft, Condensing	Coaxial or PP(s) venting certified to UL 1738 or ULC S-636 Stainless steel venting certified to UL 1738 or ULC S-636 CPVC venting certified to UL 1738 or ULC S-636
Vitocrossal 200 CM2 Series	Category IV	Positive draft, Condensing	PP(s) venting certified to UL 1738 or ULC S-636 Stainless steel venting certified to UL 1738 or ULC S-636
Vitocrossal 200 CI2 Series		Positive draft, Condensing	PP(s) venting certified to UL 1738 or ULC S-636 Stainless steel venting certified to UL 1738 or ULC S-636
Vitocrossal 300 CA3B Series	Category IV	Positive draft, Condensing	PP(s) venting certified to UL 1738 or ULC S-636 Stainless steel venting certified to UL 1738 or ULC S-636

[1] *Barometric damper must be used.*

<-Return to contents

Viessmann Warranties

US

Warranties

Product	Type	Residential Use	Commercial Use
Vitorond 100 **Vitorond 200**	Cast iron boilers	Limited 20 years for cast iron sections. Limited 2 years on boiler enclosure, combustion chamber, burner, controls and accessories. 5348 719	Limited 10 years for cast iron sections. Limited 2 years on boiler enclosure, combustion chamber, burner, controls and accessories. 5348 720
Vitodens 100-W **Vitodens 200-W** **Vitodens 222-F**	Condensing boilers	Limited lifetime for pressure vessel. Limited 2 years on boiler enclosure, burner, controls and accessories. 6167 816	Limited 10 years for pressure vessel. Limited 2 years on boiler enclosure, burner, controls and accessories. 6167 816
Vitocrossal 300 CU3A Series only	Condensing boilers	Limited lifetime for pressure vessel. Limited 2 years on boiler enclosure, burner, controls and accessories. 6167 816	Limited 10 years for pressure vessel. Limited 2 years on boiler enclosure, burner, controls and accessories. 6167 816
Vitocrossal 200 CI2, CM2 **Vitocrossal 300 CA3**	Condensing boilers	Limited 10 years for pressure vessel. Limited 2 years on boiler enclosure, burner, controls and accessories. 6175 959	Limited 10 years for pressure vessel. Limited 2 years on boiler enclosure, burner, controls and accessories. 6175 959
Vitocell 300	Stainless steel indirect-fired domestic hot water tanks	Lifetime for heat exchanger coil and tank to original owner and installation site. Limited 2 years on insulation, jacket, controls and accessories. 6177 327	Limited 8 years for heat exchanger coil and tank. Limited 2 years on insulation, jacket, controls and accessories. 6177 327
Vitocell 100-V	Enameled steel indirect-fired water heater tank	Limited 10 year warranty for heat exchanger coil, and tank. Limited 2 year parts and accessories warranty. 6221 585	Limited 5 year warranty for heat exchanger coil, and tank. Limited 2 year parts and accessories warranty. 6221 585
Vitotrans 300	Domestic hot water unit	Limited 2 years on domestic hot water unit, 5833 277	Limited 2 years on domestic hot water unit, 5833 277
Vitosol	Solar heating systems	Limited 10 years for solar collectors. Limited 2 years on controls and accessories. 5348 728	Limited 10 years for solar collectors. Limited 2 years on controls and accessories. 5348 728
Vitocal 100-AW	Heat Pumps	Limited Warranty for Heat Pump Fittings 0-1 years.	Limited Warranty for Heat Pump Fittings 0-1 years.
		Limited Warranty for Heat Pump Indoor Unit, Outdoor Unit 0-3 years.	Limited Warranty for Heat Pump Indoor Unit, Outdoor Unit 0-3 years.
		Limited Warranty for Heat Pump Compressor 0-5 years. 6221 391	Limited Warranty for Heat Pump Compressor 0-5 years. 6221 391

US

Scope	Model	Parts
Vitodens 100-W	B1HE-85 B1HE-120 B1HE-150 B1HE-199 B1KE-120 B1KE-199	Our base warranty for parts is 2 years, with a possible free 3 year extension, for a total of 5 years.
Vitodens 200-W	B2HE-85 B2HE-120 B2HE-150 B2HE-199	
Vitodens 222-F	B2TB 125	
Vitocrossal 300	CU3A 94 CU3A 125 CU3A 160 CU3A 199	

as of March 2nd, 2026

Viessmann

ASME
Boiler and pressure vessel built to ASME Sec. IV. American Society of Mechanical Engineers. Applicable in Canada and USA.

AHRI
Air Conditioning, Heating and Refrigeration Institute. Listing is issued for gas- and oil-fired boilers rated < 300 MBH which have AFUE values (residential), and also for units > 300 MBH which have combustion efficiency ratings (commercial). Applicable in Canada and USA.

Energy Star Logo
Listing.
Issued for oil and gas boilers with < 300 MBH only.
Applicable in Canada and USA.

CRN
Canadian Registration Number approval. Issued for Canadian products complying with CSA-B51 standard and the respective "Provincial Boiler and Pressure Vessel Act". Acceptance in all provinces is indicated with a "C".
Applicable in Canada only.

AHRI
Air Conditioning, Heating and Refrigeration Institute Listing is issued for Air-Cooled Water Chilling Packages.

Energy Verification Logo
Listing.
Issued for products with < 300 MBH.
Applicable in Canada only.

CSA
Canadian Standards Association approval. Tests products for compliance to Canadian and American codes and standards.
Applicable in Canada and USA.

NY
New York City approval.
Bureau of Air Resources (BAR) for oil boilers greater than 20 GPH.
Applicable in NY City only.

ICC-SRCC Certification
Solar Rating and Certification Corporation.

Low Lead Content
CSA Low Lead Content Certification Program including US Safe Drinking Water Act, NSF/ANSI 372 as well as other US State requirements.
Applicable in Canada and USA.

MASS
Massachusetts State approval.
Applicable to gas-fired boilers and indirect-fired domestic hot water tanks only.
Applicable in Massachusetts only.

UL
Underwriters Laboratories approval. Tests products for compliance to Canadian and American codes and standards.
Applicable in Canada and USA.

ETL
Environmental Testing Laboratories Inc. Certification body with product testing done by Intertek Testing Services.

CEC
California Energy Commission listing.
Applicable in California only.

VIESSMANN Appendix 4

<-Return to contents

Approval and Listing Overview

as of March 2nd, 2026

Free-Standing Boilers

Oil-/Gas-Fired Heating Boilers		CSA	CRN	AHRI	NY	MASS	ASME	Ener Star	Ener Verif.	CEC	Price List Section
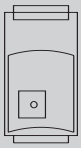	**Vitorond 100 VR1**	√	below	√	below	exempt	√	√	√	√	5.1
		L6792.513467890YT2			MEA# 15-01-E						
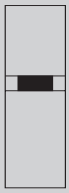	**Vitodens 222-F B2TB**	√	below	√	n.a.	√	√	√	√	√	1.4
		B2TB 125 1859.98TN; T4603.4; W5649.2									
	Vitocrossal 300 CU3A	√	below	√	n.a.	√	√	√	√	√	1.5
		CU3A 94 exempt CU3A 125 exempt CU3A 160 R1548.5C CU3A 199 R1548.5C									

Wall-Mount Boilers

Gas-Fired Condensing Boilers		CSA	CRN	AHRI	MASS	Low Lead	ASME	Ener Star	Ener Verif.	CEC	Price List Section
	Vitodens 100-W B1HE B1KE	√	below	√	√	√	√	√	√	√	1.1
		B1HE-85 9645.7890YTN B1HE-120 9645.7890YTN B1KE-120 9645.7890YTN B1HE-150 R7025.5C B1HE-199 R7025.5C B1KE-199 R7025.5C									
	Vitodens 200-W B2HA B2HE	√	below	√	√		√	√	√	√	1.2 1.3
		B2HA 285 8094.712346890YTN B2HA 311 8094.76 B2HA 352 8094.712346890YTN B2HA 399 R6242.5C B2HA 530 R6242.5C B2HE-85 9645.7890YTN B2HE-120 9645.7890YTN B2HE-150 R7025.5C B2HE-199 R7025.5C									

as of March 2nd, 2026

Indirect-Fired Domestic Hot Water Storage Tanks		CSA	CRN	Low Lead	NY	MASS	AHRI	
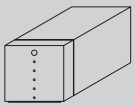	**Vitocell 300-H**	√	below	√	below	√		**2.2**
		119USG/450L 5075.71, C8324.6			MEA# 71-90-E			
	Vitocell 300-V	√	exempt	√	exempt	√	√	**2.3**
	Vitocell 300-B	√	exempt	√	exempt	√	√	**2.3**

Solar Systems

Solar Collectors		ICC-SRCC			Price List Section
	Vitosol 200-FM SV2F	below OG 100 10002029			**3.1**
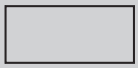	**Vitosol 200-FM SH2F**	below OG 100 10002026			**3.1**

as of March 2nd, 2026

Free-Standing Boilers

Gas-Fired Condensing Boilers		CSA	CRN	AHRI	MASS	CEC	ASME	SCAQMD	Price List Section
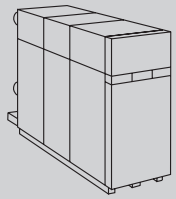	**Vitocrossal 300 CA3B**	√	below	√	√	√	√	n.a.	**11.1**
		CA3B 2.5 R3986.5C CA3B 2.5 DF R3996.5C CA3B 3.0 R3986.5C CA3B 3.0 DF R3996.5C CA3B 3.5 SF + DF R3995.5C CA3B 4.0 SF + DF R3992.5C CA3B 5.0 SF + DF R3994.5C CA3B 6.0 SF + DF R4042.5C							
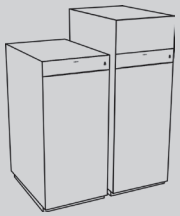	**Vitocrossal 200 CI2**	√	below	√	√	√	√	√	**10.1**
		CI2 399/500 R8502.5C CI2 750/1000 R8501.5C CI2 1500 R8420.5C CI2 2000 R8448.5C							

Return to contents->

VITOROND 100

Ordering / Shipping Configuration Overview

Vitorond 100	Chimney Vented Applications								
	Boiler	jkt	fittings	**Burner**	brnr	**Control**	ctl	ppcm	Model No.
with Beckett Burners									
VR1 91	7249 048 **2,410.–**		7536 807 **762.–**	Beckett NX	7452 064 **1,180.–**	HydroLevel control			Order No. **USD**
VR1 105	7249 049 **2,860.–**		7536 807 **762.–**	Beckett NX	7452 065 **1,180.–**	HydroLevel control			Order No. **USD**
VR1 140	7249 050 **3,120.–**		7536 807 **762.–**	Beckett NX	7452 066 **1,180.–**	HydroLevel control			Order No. **USD**
VR1 161	7344 379 **2,920.–**	7344 556 **949.–**	7536 808 **693.–**	Beckett NX	7452 067 **1,180.–**	HydroLevel control			Order No. **USD**
VR1 196	7344 385 **3,270.–**	7344 557 **1,260.–**	7536 808 **693.–**	Beckett AFG	7452 068 **1,150.–**	HydroLevel control			Order No. **USD**
VR1 245	7344 394 **3,530.–**	7344 558 **1,650.–**	7536 808 **693.–**	Beckett AFG	7452 068 **1,150.–**	HydroLevel control			Order No. **USD**
VR1 91	7249 048 **2,410.–**		7134 851 **707.–**	Beckett NX	7452 064 **1,180.–**	Vitotronic KW10B	7834 238 **1,860.–**		Order No. **USD**
VR1 105	7249 049 **2,860.–**		7134 851 **707.–**	Beckett NX	7452 065 **1,180.–**	Vitotronic KW10B	7834 238 **1,860.–**		Order No. **USD**
VR1 140	7249 050 **3,120.–**		7134 851 **707.–**	Beckett NX	7452 066 **1,180.–**	Vitotronic KW10B	7834 238 **1,860.–**		Order No. **USD**
VR1 161	7344 379 **2,920.–**	7344 556 **949.–**	7134 852 **696.–**	Beckett NX	7452 067 **1,180.–**	Vitotronic KW10B	7834 238 **1,860.–**		Order No. **USD**
VR1 196	7344 385 **3,270.–**	7344 557 **1,260.–**	7134 852 **696.–**	Beckett AFG	7452 068 **1,150.–**	Vitotronic KW10B	7834 238 **1,860.–**		Order No. **USD**
VR1 245	7344 394 **3,530.–**	7344 558 **1,650.–**	7134 852 **696.–**	Beckett AFG	7452 068 **1,150.–**	Vitotronic KW10B	7834 238 **1,860.–**		Order No. **USD**
VR1 91	7249 048 **2,410.–**		7134 851 **707.–**	Beckett NX	7452 064 **1,180.–**	Vitotronic KW2	7134 765 **2,330.–**	7133 436 **964.–**	Order No. **USD**
VR1 105	7249 049 **2,860.–**		7134 851 **707.–**	Beckett NX	7452 065 **1,180.–**	Vitotronic KW2	7134 765 **2,330.–**	7133 436 **964.–**	Order No. **USD**
VR1 140	7249 050 **3,120.–**		7134 851 **707.–**	Beckett NX	7452 066 **1,180.–**	Vitotronic KW2	7134 765 **2,330.–**	7133 436 **964.–**	Order No. **USD**
VR1 161	7344 379 **2,920.–**	7344 556 **949.–**	7134 852 **696.–**	Beckett NX	7452 067 **1,180.–**	Vitotronic KW2	7134 765 **2,330.–**	7133 436 **964.–**	Order No. **USD**
VR1 196	7344 385 **3,270.–**	7344 557 **1,260.–**	7134 852 **696.–**	Beckett AFG	7452 068 **1,150.–**	Vitotronic KW2	7134 765 **2,330.–**	7133 436 **964.–**	Order No. **USD**
VR1 245	7344 394 **3,530.–**	7344 558 **1,650.–**	7134 852 **696.–**	Beckett AFG	7452 068 **1,150.–**	Vitotronic KW2	7134 765 **2,330.–**	7133 436 **964.–**	Order No. **USD**
with Riello Burners									
VR1 91	7249 048 **2,410.–**		7536 807 **762.–**	Riello F3	7311 316 **1,380.–**	HydroLevel control			Order No. **USD**
VR1 105	7249 049 **2,860.–**		7536 807 **762.–**	Riello F3	7311 316 **1,380.–**	HydroLevel control			Order No. **USD**
VR1 140	7249 050 **3,120.–**		7536 807 **762.–**	Riello F5	7311 317 **1,430.–**	HydroLevel control			Order No. **USD**
VR1 161	7344 379 **2,920.–**	7344 556 **949.–**	7536 808 **693.–**	Riello F5	7311 317 **1,430.–**	HydroLevel control			Order No. **USD**
VR1 196	7344 385 **3,270.–**	7344 557 **1,260.–**	7536 808 **693.–**	Riello F5	7311 317 **1,430.–**	HydroLevel control			Order No. **USD**
VR1 245	7344 394 **3,530.–**	7344 558 **1,650.–**	7536 808 **693.–**	Riello F10	7311 318 **1,790.–**	HydroLevel control			Order No. **USD**
VR1 91	7249 048 **2,410.–**		7134 851 **707.–**	Riello F3	7311 316 **1,380.–**	Vitotronic KW10B	7834 238 **1,860.–**		Order No. **USD**
VR1 105	7249 049 **2,860.–**		7134 851 **707.–**	Riello F3	7311 316 **1,380.–**	Vitotronic KW10B	7834 238 **1,860.–**		Order No. **USD**
VR1 140	7249 050 **3,120.–**		7134 851 **707.–**	Riello F5	7311 317 **1,430.–**	Vitotronic KW10B	7834 238 **1,860.–**		Order No. **USD**
VR1 161	7344 379 **2,920.–**	7344 556 **949.–**	7134 852 **696.–**	Riello F5	7311 317 **1,430.–**	Vitotronic KW10B	7834 238 **1,860.–**		Order No. **USD**
VR1 196	7344 385 **3,270.–**	7344 557 **1,260.–**	7134 852 **696.–**	Riello F5	7311 317 **1,430.–**	Vitotronic KW10B	7834 238 **1,860.–**		Order No. **USD**
VR1 245	7344 394 **3,530.–**	7344 558 **1,650.–**	7134 852 **696.–**	Riello F10	7311 318 **1,790.–**	Vitotronic KW10B	7834 238 **1,860.–**		Order No. **USD**
VR1 91	7249 048 **2,410.–**		7134 851 **707.–**	Riello F3	7311 316 **1,380.–**	Vitotronic KW2	7134 765 **2,330.–**	7133 436 **964.–**	Order No. **USD**
VR1 105	7249 049 **2,860.–**		7134 851 **707.–**	Riello F3	7311 316 **1,380.–**	Vitotronic KW2	7134 765 **2,330.–**	7133 436 **964.–**	Order No. **USD**
VR1 140	7249 050 **3,120.–**		7134 851 **707.–**	Riello F5	7311 317 **1,430.–**	Vitotronic KW2	7134 765 **2,330.–**	7133 436 **964.–**	Order No. **USD**
VR1 161	7344 379 **2,920.–**	7344 556 **949.–**	7134 852 **696.–**	Riello F5	7311 317 **1,430.–**	Vitotronic KW2	7134 765 **2,330.–**	7133 436 **964.–**	Order No. **USD**
VR1 196	7344 385 **3,270.–**	7344 557 **1,260.–**	7134 852 **696.–**	Riello F5	7311 317 **1,430.–**	Vitotronic KW2	7134 765 **2,330.–**	7133 436 **964.–**	Order No. **USD**
VR1 245	7344 394 **3,530.–**	7344 558 **1,650.–**	7134 852 **696.–**	Riello F10	7311 318 **1,790.–**	Vitotronic KW2	7134 765 **2,330.–**	7133 436 **964.–**	Order No. **USD**